USER MANUAL

MFR-3100EX

Multi Format Routing Switcher

MFR-GPI
MFR-TALM

1st Edition – Rev. 1

FOR-A COMPANY LIMITED

Precautions

Important Safety Warnings

[Power]

Caution	Operate unit **only** at the specified supply voltage.
	Disconnect the power cord via the power plug only. Do **not** pull on the cable portion.
Stop	Do **not** place or drop heavy or sharp-edged objects on the power cord. A damaged cord can cause fire or electrical shock hazards. Regularly check the power cord for excessive wear or damage to avoid possible fire / electrical hazards.
Caution	Ensure the power cord is firmly plugged into the AC outlet.

[Grounding]

Caution	**Ensure** the unit is properly grounded at all times to prevent electrical shock.
Hazard	Do **not** ground the unit to gas lines, units, or fixtures of an explosive or dangerous nature.

[Operation]

Hazard	Do **not** operate the unit under hazardous or potentially explosive atmospheric conditions. Doing so could result in fire, explosion, or other hazardous results.
Hazard	Do **not** allow liquids, metal pieces, or other foreign materials to enter the unit. Doing so could result in fire, other hazards, or a unit malfunction.
	If a foreign material does enter the unit, turn the power off and **immediately** disconnect the power cord. Remove the material and contact an authorized service representative if damage has occurred.

[Transportation]

Hazard	**Handle** with care to avoid impact shock during transit, which may cause malfunction. When you need to transport the unit, use the original or suitable alternative packing material.

[Circuitry Access]

	Do **not** remove covers, panels, casing, or access the circuitry with power applied to the unit. Turn the power off and disconnect the power cord prior to removal. Internal servicing / adjustment of unit should only be performed by qualified personnel.
Stop	Do **not** touch any parts / circuitry with a high heat factor. Capacitors can retain enough electric charge to cause mild to serious shock, even after the power has been disconnected. Capacitors associated with the power supply are especially hazardous.
Hazard	Unit should **not** be operated or stored with cover, panels, and / or casing removed. Operating the unit with circuitry exposed could result in electric shock / fire hazards or a unit malfunction.

[Potential Hazards]

Caution	If abnormal odors or noises are noticed coming from the unit, immediately turn the power off and disconnect the power cord to avoid potentially hazardous conditions. If problems similar to the above occur, contact an authorized service representative **before** attempting to operate the unit again.

[Ground Terminal, and Rubber Feet]

Caution	To ground the unit, or to install rubber feet, do not use screws or materials other than those supplied. Doing so may cause damage to the internal circuits or components of the unit. If you remove the rubber feet that are attached to the unit, do not reinsert the screws that secure the rubber feet.

[Consumables]

Caution	Consumable items that are used in the unit must be periodically replaced. For further details on which parts are consumables and when they should be replaced, refer to the specifications at the end of the Operation Manual. Since the service life of the consumables varies greatly depending on the environment in which they are used, such items should be replaced at an early date. For details on replacing consumable items, contact your dealer.

Lighttpd

Libjpeg

Upon Receipt

MFR-3100EX units and their accessories are fully inspected and adjusted prior to shipment. Check your received items against the packing lists below. Check to ensure no damage has occurred during shipment. If damage has occurred, or items are missing, inform your supplier immediately.

◆ **MFR-3100EX Box**

ITEM	QTY	REMARKS
MFR-3100EX	1	
AC Cord	1 set	AC cord clamp included (See next page for installation instructions)
Rubber Feet	1	
Setup Guide	1	

◆ **Input / Output Cards**

ITEM	QTY	REMARKS
MFR-8SDI	1 - 8 *	SDI/digital audio input card (SDI/MADI x 8ch)
MFR-8SDO	1 - 8 *	8 SDI output card
MFR-8AAI	1 - 8 *	Analog audio input card with A/D converter (Analog 8 stereo pairs)
MFR-8AAO	1 - 9 *	Analog audio output card with D/A converter (Analog 8 stereo pairs)
MFR-8AESI	1 - 8 *	AES/EBU audio input card (AES/EBU 8 stereo pairs)
MFR-8AESO	1 - 9 *	AES/EBU audio output card (AES/EBU 8 stereo pairs)
MFR-16MV	1 - 4 *	16 SDI output card with multiviewer function.
MFR-8SDIGB	1 - 8 *	SDI input card (Gearbox 2ch built-in)
MFR-8SDOGB	1 - 9 *	SDI output card (Gearbox 2ch built-in)
MFR-8MADIPO	1 - 9 *	Digital audio/video output card (w/ audio mapping) (MADI/SDI x 8ch)
MFR-8AESPO	1 - 9 *	Digital audio output card (w/ audio mapping) (AES/EBU 8 stereo pairs)
MFR-8SDODL	1 - 9 *	8 SDI output card (w/ AVDL function)

* The number of installed cards varies depending on the system configuration. See the **Matrix Size Chart** on Sec. 2-1-1.

◆ Options (for MFR-3100EX)

ITEM	QTY	REMARKS
MFR-31CPU	1	Redundant CPU card *
MFR-31PS	1 set	Redundant power supply unit (with AC cord and AC cord clamp.)
MFR-8RUA/18RUA/39RUA MFR-40RU MFR-16RU/16RUD/16RUTA MFR-16/32/64RUW	1	Remote Control Unit

◆ Interface Expansion Unit

ITEM	QTY	REMARKS
MFR-GPI	1	
AC Adaptor	1	With DC lock plug
AC Cord	1	
EIA Rack Mount Brackets	1 set	
LAN Cable (straight)	1	

◆ Tally Manager Unit

ITEM	QTY	REMARKS
MFR-TALM	1	
AC Adaptor	1	With DC lock plug
AC Cord	1	
EIA Rack Mount Brackets (optional)	1 set	Single- or Dual-unit type

◆ MFR-RULINK Unit

ITEM	QTY	REMARKS
MFR-RULINK	1	
AC Adaptor	1	With DC lock plug
AC Cord	1	
EIA Rack Mount Brackets (optional)	1 set	Single- or Dual-unit type

AC Cord Clamp Installation

1) Insert the anchor into the hole next to the AC inlet.
2) Plug in the AC cord.
3) Adjust the strap length to fit.
4) Wrap the AC cord clamp around the AC cord.
5) Gently pull on the AC cord to ensure it has been securely plugged in.

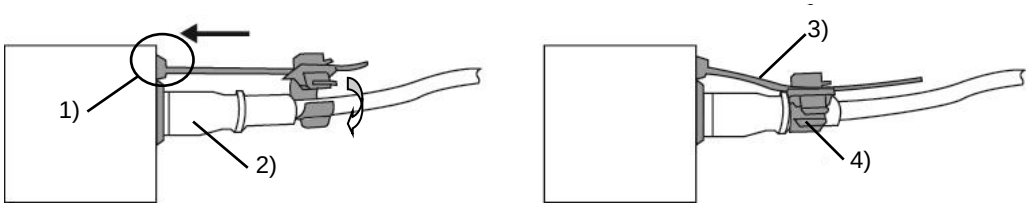

Font Conventions

The following conventions are used throughout this manual:

- References to the MFR-3100EX Web-based Control Software are indicated by [Web-based Control: XXX page].

Table of Contents

1. Prior to Starting

1-1. Overview

The MFR-3100EX is a multi-format routing switcher that supports 12G-SDI (When MFR-8SDIGB/ 8SDOGB are installed), 3G-SDI, HD-SDI, SD-SDI, ASI, AES/EBU, MADI and analog audio signals. Inside the 4U case a matrix of up to 64 inputs/72 outputs can be configured. And by linking multiple units, they can be used as a large-scale routing switcher. It supports various functions such as the capability of linking multiple cases, tally connections with peripheral devices, and automatic source name tracking, to allow the units to be the core product in small to medium size systems.

1-2. Features

- Support for **3G-SDI, HD-SDI, SD-SDI**, and **ASI** signals with automatic signal recognition that enables operation without concern for the type of signal. **12G-SDI, AES/EBU**, **MADI** and **analog audio** input/output and **multiview output** are also supported by installing optional input/output cards.
- By linking multiple units, they can be used as a large-scale routing switcher.
- Up to **2 units** can be linked together.
- One routing switcher can be virtually partitioned to build any theoretical hierarchy, which creates possibilities for use in various operating forms.
- Various crosspoint control functions such as **Salvo**, **Take**, **Link**, **Level**, and **Chop** operation.
- **Tally linking** with FOR-A's video switchers (HANABI Series) and multi viewers. Source name displays on video switchers and multi viewers can be switched in conjunction with switching controlled in the main unit. MFR routers support TSL and Harris protocol, enabling linkage to other companies' products.
- Built-in web server for **remote control** through a web browser
- **SNMP support** enabling SNMP monitoring system configuration
- **Status monitoring** for power supply, fan, CPU as well as crosspoint errors and etc.
- **CPU board redundancy** allowing monitoring of primary CPU board operation via the secondary board. Immediate and smooth switch over to the secondary board without down time in case of irregularities, as well as stable remote control operation supported by the **network redundancy**
- **Power unit redundancy** for stable power supply against power unit failure or power supply troubles
- Matrix partition and level setting capabilities by **remote control units** support a flexible control environment (maximum of 128 units in total including the main unit)
- Remote control panel connectivity for configuring a huge control panel
- Interface expansion unit (**MFR-GPI**) for additional 128 (32 x 4) GPI/O and 4 serial ports (9-pin D-sub, male)
- **MFR-TALM** Tally Manager Unit is designed specifically to manage tally and signal name data in the MFR system and the exchange of this data with external devices such as a video switcher, multiviewer etc. The unit performs the task of tally data computation, which is ordinarily undertaken by the MFR main unit, to accelerate the task.
- Conversions between 12G-SDI and Quad Link 3G-SDI and between 2SI and SQD available by installing optional **MFR-8SDIGB** and **MFR-8SDOGB** (Gearbox feature built-in) cards.
- **MFR-8SDODL** option card (w/ AVDL function) allows up to 5H phase adjustment against reference.
- The MFR-RULINK connects MFR main units to MFR remote control units that are located in distant locations. Operations such as Crosspoint switching or Lock can be performed with MFR-RULINK using MFR remote control units from a distant location.

2. Panel Descriptions

The assigned CPU and LAN port numbers for MFR-31CPU and MFR-3100EX are shown in the table below.

	CPU1/2	Primary/ Secondary	MFR-LAN1/2	PC-LAN1/2
MFR-31CPU	CPU1	Primary CPU	MFR-LAN1	PC-LAN1
MFR-3100EX	CPU2	Secondary CPU	MFR-LAN2	PC-LAN2

2-1. MFR-3100EX Front Panel

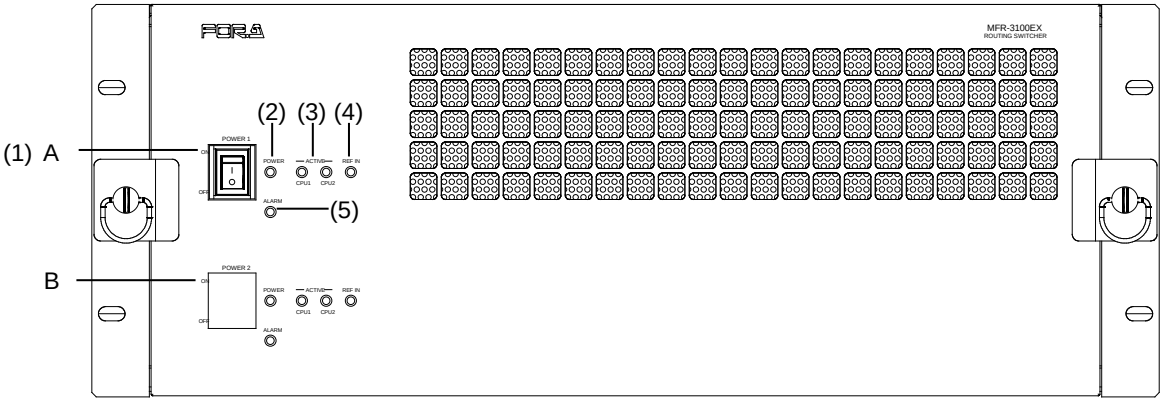

Char.	Name	Description
A	POWER1	Power switch 1 (standard equipment) (1) Switch to turn unit power On/Off. (2) DC power supply voltage indication LED (Normal: lit green / Error: unlit) (3) ACTIVE CPU LED (ACTIVE CPU: lit green/ Non-ACTIVE CPU: unlit) (4) REF IN LED (Locked to external reference signal: lit green Not locked or no reference signal: unlit) (5) Alarm indication LED (Normal: unlit / Power or fan error, Secondary CPU active: lit)
B	POWER2	Power switch 2 (optional equipment) (1), (2), (3), (4) and (5) the same as POWER1.

2-1-1. Matrix Size Chart

◆ **Standard SDI Signal Routing**

The number of installed MFR-8SDI, MFR-8SDO and MFR-8SDODL cards determines the matrix size.(64 x 72 to 8 x 8)

		Number of cards: MFR-8SDO, MFR-8SDODL								
		9	8	7	6	5	4	3	2	1
Number of cards: MFR-8SDI	8	64 x 72	64 x 64	64 x 56	64 x 48	64 x 40	64 x 32	64 x 24	64 x 16	64 x 8
	7	56 x 72	56 x 64	56 x 56	56 x 48	56 x 40	56 x 32	56 x 24	56 x 16	56 x 8
	6	48 x 72	48 x 64	48 x 56	48 x 48	48 x 40	48 x 32	48 x 24	48 x 16	48 x 8
	5	40 x 72	40 x 64	40 x 56	40 x 48	40 x 40	40 x 32	40 x 24	40 x 16	40 x 8
	4	32 x 72	32 x 64	32 x 56	32 x 48	32 x 40	32 x 32	32 x 24	32 x 16	32 x 8
	3	24 x 72	24 x 64	24 x 56	24 x 48	24 x 40	24 x 32	24 x 24	24 x 16	24 x 8
	2	16 x 72	16 x 64	16 x 56	16 x 48	16 x 40	16 x 32	16 x 24	16 x 16	16 x 8
	1	8 x 72	8 x 64	8 x 56	8 x 48	8 x 40	8 x 32	8 x 24	8 x 16	8 x 8

MFR-16MV cards can also be installed to the router. A single MFR-16MV card provides 16 outputs (using two slots) and supports two multiview channels. To output multiview images, a multiview channel (MV OUT1 or MV OUT2) needs to be directly assigned to output ports. Instead of multiview images, you can also assign any destination channel to output ports as a single image.

◆ 12G-SDI Signal Routing

12G-SDI signal routing is enabled by installing MFR-8SDIGB and MFR-8SDOGB cards and using them for 12G-SDI input/output. (If using MFR-8SDIGB and MFR-8SDOGB for 3G-SDI input/output, the "**Standard SDI Signal Routing**" table in the previous page applies.)
The number of installed MFR-8SDIGB and MFR-8SDOGB cards determines the matrix size.

(16 x 18 to 2 x 2)

		Number of cards: MFR-8SDOGB (12G-SDI output)								
		9	8	7	6	5	4	3	2	1
Number of cards MFR-8SDIGB (12G-SDI input)	8	16 x 18	16 x 16	16 x 14	16 x 12	16 x 10	16 x 8	16 x 6	16 x 4	16 x 2
	7	14 x 18	14 x 16	14 x 14	14 x 12	14 x 10	14 x 8	14 x 6	14 x 4	14 x 2
	6	12 x 18	12 x 16	12 x 14	12 x 12	12 x 10	12 x 8	12 x 6	12 x 4	12 x 2
	5	10 x 18	10 x 16	10 x 14	10 x 12	10 x 10	10 x 8	10 x 6	10 x 4	10 x 2
	4	8 x 18	8 x 16	8 x 14	8 x 12	8 x 10	8 x 8	8 x 6	8 x 4	8 x 2
	3	6 x 18	6 x 16	6 x 14	6 x 12	6 x 10	6 x 8	6 x 6	6 x 4	6 x 2
	2	4 x 18	4 x 16	4 x 14	4 x 12	4 x 10	4 x 8	4 x 6	4 x 4	4 x 2
	1	2 x 18	2 x 16	2 x 14	2 x 12	2 x 10	2 x 8	2 x 6	2 x 4	2 x 2

◆ AUDIO Signal Routing

The number of installed audio cards: MFR-8SDI (*1), MFR-8AAI, MFR-8AAO, MFR-8AESI, MFR-8AESO, MFR-8MADIPO and MFR-8AESPO determines the matrix size.
(The matrix sizes below do not indicate the number of audio channels, but the number of streams. Use the followings to find the number of audio channels: SDI embedded: 16 channels, AES/EBU: 2 channels, Analog: 2 channels, MADI: 64 channels)

		Number of cards: MFR-8AAO, MFR-8AESO, MFR-8MADIPO or MFR-8AESPO								
		9	8	7	6	5	4	3	2	1
Number of cards: MFR-8SDI MFR-8AAI MFR-8AESI	8	64 x 72	64 x 64	64 x 56	64 x 48	64 x 40	64 x 32	64 x 24	64 x 16	64 x 8
	7	56 x 72	56 x 64	56 x 56	56 x 48	56 x 40	56 x 32	56 x 24	56 x 16	56 x 8
	6	48 x 72	48 x 64	48 x 56	48 x 48	48 x 40	48 x 32	48 x 24	48 x 16	48 x 8
	5	40 x 72	40 x 64	40 x 56	40 x 48	40 x 40	40 x 32	40 x 24	40 x 16	40 x 8
	4	32 x 72	32 x 64	32 x 56	32 x 48	32 x 40	32 x 32	32 x 24	32 x 16	32 x 8
	3	24 x 72	24 x 64	24 x 56	24 x 48	24 x 40	24 x 32	24 x 24	24 x 16	24 x 8
	2	16 x 72	16 x 64	16 x 56	16 x 48	16 x 40	16 x 32	16 x 24	16 x 16	16 x 8
	1	8 x 72	8 x 64	8 x 56	8 x 48	8 x 40	8 x 32	8 x 24	8 x 16	8 x 8

(*1) Used as MADI input card.

2-2. MFR-3100EX Rear Panel

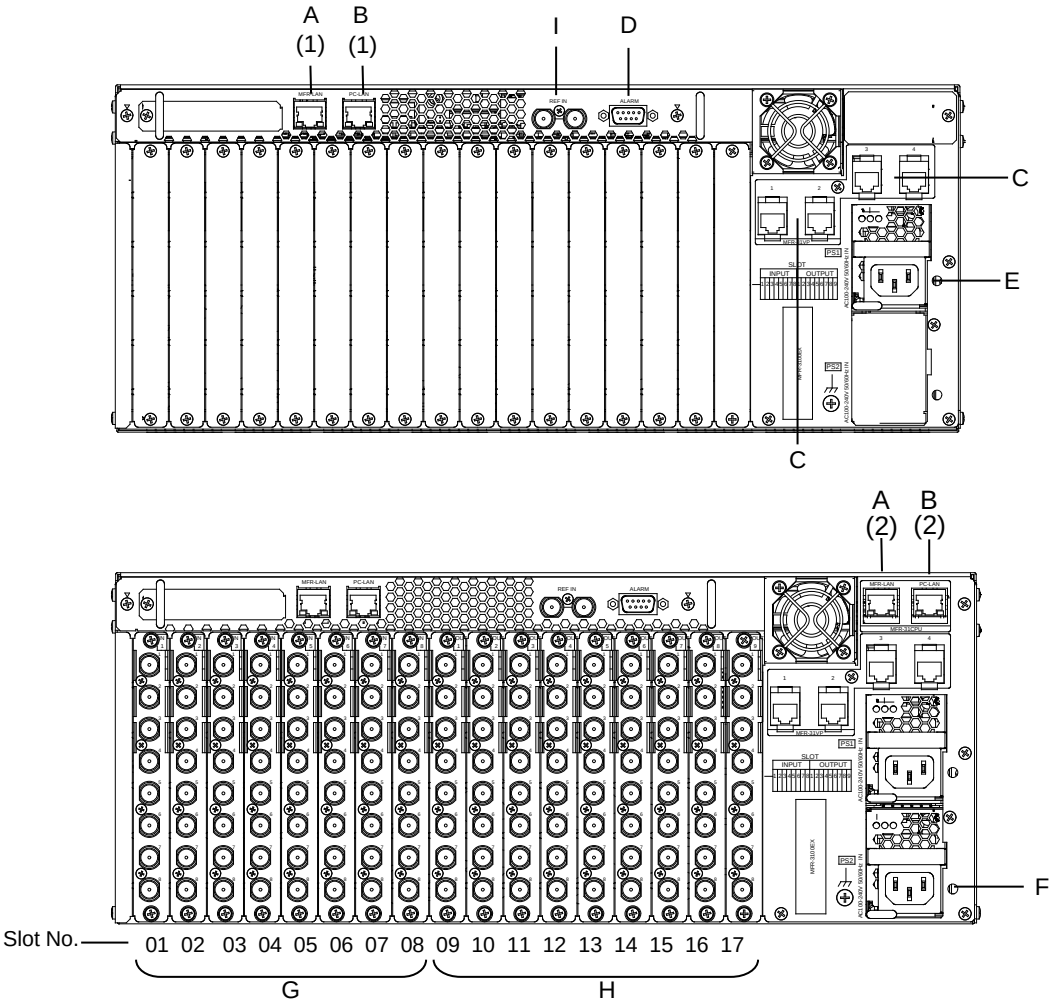

* The above figure shows an MFR-3100EX with MFR-8SDI, MFR-8SDO, MFR-31CPU and MFR-31PS cards installed.

Char.	Name	Description
A	MFR-LAN	Ethernet ports for connection to MFR Remote Control Units and MFR-GPI (10/100BASE-TX, RJ-45) (1) MFR-LAN2 (for MFR-3100EX) (2) MFR-LAN1 (for MFR-31CPU)
B	PC-LAN	Ethernet ports for connection to PC or other external unit (10/100/1000BASE-T, RJ-45) (1) PC-LAN2 (for MFR-3100EX) (2) PC-LAN1 (for MFR-31CPU)
C	NC	Not used
D	ALARM	Used for alarm output ► See Sec. 2-2-1. "Interfaces."
E	AC IN1	Used to connect Power Supply Unit 1 (standard equipment) to an AC power source
F	AC IN2	Used to connect Power Supply Unit 2 (optional) to an AC power source
G	INPUT	Used for installing input cards
H	OUTPUT	Used for installing output cards
I	REF IN	Used to input a reference signal (BB or Tri-level sync) (With loop-through. Terminate with 75-ohm terminator, if unused.)

IMPORTANT

When using the MFR-31CPU, each of the two MFR-LANs should be connected to their respective devices to enable CPU redundancy. Also, when connecting MFR series devices to LAN, they should be on a separate network from other systems, such as an internal LAN. Do not use the spanning tree or other functions that inhibit or restrict communication in MFR-LAN.

Input /output cards and Slots

Char.	Slot	Video card	Audio card
G	INPUT1−8 (No. 01-08)	8SDI / 8SDIGB: Max. 8 cards	8AAI, 8AESI: Max 8 cards
H	OUTPUT1−9 (No. 09-17)	8SDO / 8SDOGB / 8SDODL: Max. 9 cards 16MV: Max. 4cards *	8AAO, 8AESO, 8MADIPO, 8AESPO: Max. 9 cards

* Available slot pairs are No. **09-10**, **11-12**, **13-14**, and **15-16**.

◆ **Cooling fans**

Four cooling fans are installed in MFR-3100EX units: FAN 1 is on the rear panel and FAN2, FAN 3 and 4 are on the front panel inside as shown below.

Rear Panel

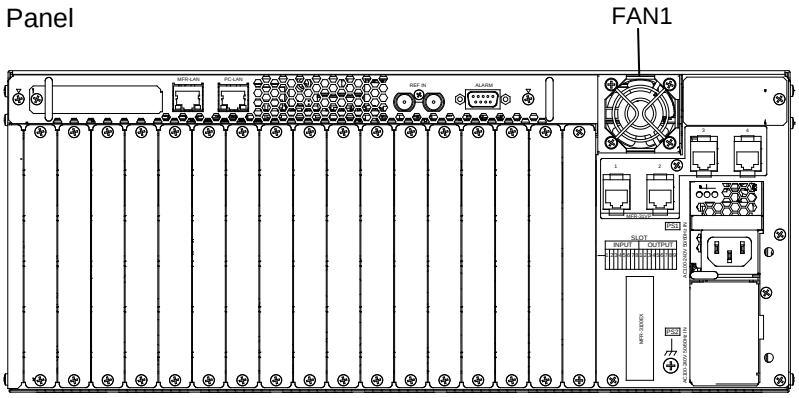

Front Panel Inside

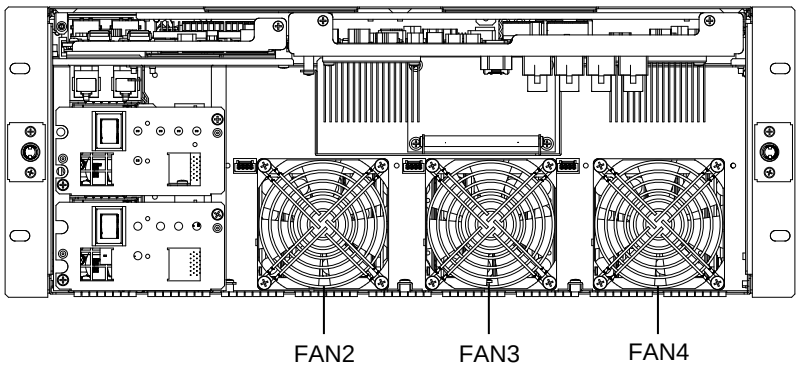

2-2-1. Interfaces

◆ **ALARM Connector (9-pin D-sub, female)**

Alarm 1 Out:

Under normal operation:	Pins 1 and 6 are open.
In a malfunction or power-off state:	Pins 1 and 6 are closed.

Alarm 2 Out:

Under normal operation:	Pins 2 and 7 are open.
In a malfunction or power-off state:	Pins 2 and 7 are closed.

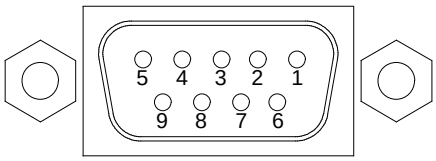

ALARM Connector Pin Assignments

Pin No.	Signal Name	Description
1	ALARM 1 OUT	Alarm 1 output (Default setting: Fan)
2	ALARM 2 OUT	Alarm 2 output (Default setting: Power)
3	NC	Unused
4	NC	Unused
5	NC	Unused
6	ALARM 1 COMMON	Alarm 1 output, common
7	ALARM 2 COMMON	Alarm 2 output, common
8	GND	Signal ground
9	GND	Signal ground

The following items can be set for ALARM1 OUT and ALARM2 OUT. The alarms can be assigned in the Web-Based Control.

Available alarm signals

Fan (including power unit cooling fans)
Power
Secondary CPU error
CPU Changeover (Issued when the secondary CPU is activated to change over the operation)
Crosspoint Error

2-2-2. SDI Input/ Output Cards Installation and Removal

MFR-3100EX units allow Input/ Output cards to be installed into slots on the rear panel.

◆ **Removing input /output cards**

To remove an installed card while the MFR-3100EX power is on, turn off the target Slot Power on the **SlotStatus** page of Web-based Control and remove the card.

◆ **Installing input/output cards**

(1) Insert an input/ output card into the slot.
(2) Open the **SlotStatus** page of Web-based Control and if the **Slot Power** of the inserted slot is off, turn it **ON**.

* To power on/ off an installed MFR-16MV card using I/O card power switches, two power switches (for two slots) must be turned on/ off.

2-2-3. MFR-31CPU Card Installation and Removal

MFR-31CPU cards can be installed or removed with the MFR-3100EX power turned on as shown below.

IMPORTANT

Do not touch any other parts on the card. Static electricity may damage sensitive electrical components on the card.

◆ **Removing an installed MFR-31CPU card**

(1) Switch the ACTIVE CPU from the MFR-31CPU to the MFR-3100EX CPU.
(2) Verify that the ACTIVE light for CPU2 on the left side of the front panel is lit.
(3) Disconnect the MFR-31CPU cables connected to the MFR-LAN and PC-LAN.
(4) Open the front panel and release the screw on the right side of the MFR-31CPU.
(5) Pull the MFR-31CPU gently straight out of the slot.
(6) Close the front panel.

* See “Manual Switching of Active CPU” in the Web-based Control Operation Manual.

◆ **Inserting an MFR-31CPU card**

(1) Open the front panel.
(2) Align both edges of the MFR-31CPU with the guide rails in the slot and insert the card.
(3) Verify that the MFR-31CPU is inserted properly, and secure the screw on the right side of the MFR-31CPU.
(4) Close the front panel.
(5) LAN connect PC-LAN1 and PC-LAN2 to the same network. Similarly, LAN connect MFR-LAN1 and MFR-LAN2 to the same network.

◆ **Manually activating the MFR-31CPU**

Once an MFR-31CPU is installed, it is NOT automatically activated. Follow the procedure below to manually activate the MFR-31CPU.

(1) After installing an MFR-31CPU, switch the MFR-31CPU to **ACTIVE** using Web-based Control.
(2) Verify that the CPU1 ACTIVE lamp on the left side of the front panel is lit and CPU2 ACTIVE lamp is unlit.

2-3. SDI Input / Output Cards

Set up **input signals** in the Web-based Control Software as shown below.

◆ **Source Assignment**
Open the [Web-based Control: **Router System Settings - Source Assignment** page].
This page allows you to assign physical inputs to logical input channels.

◆ **Source Name**
Open the [Web-based Control: **Router System Settings - Source Name** page].
This page allows you to change source names displayed on Remote Controllers or other devices.

Set up **output signals** in the Web-based Control Software as shown below.

◆ **Destination Assignment**
Open the [Web-based Control: **Router System Settings - Destination Assignment** page].
This page allows you to assign physical outputs to logical output channels.

◆ **Destination Name**
Open the [Web-based Control: **Router System Settings - Destination Name** page].
This page allows you to change destination names displayed on Remote Controllers or other devices.

2-3-1. MFR-8SDI

MFR-8SDI is an SDI or digital audio input card.
When using as an SDI card, it can accept 8 of 3G/HD/SD-SDI and ASI signals.
When using as a digital audio card, refer to Sec. 2-4-5. “MFR-8SDI (MADI Input)” for details.
Up to **8** cards can be installed into **Slot No. 01 to 08**.
► See “Input /output cards and Slots” in Sec. 2-2. "MFR-3100EX Rear Panel."

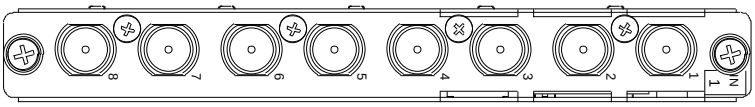

BNC x 8 inputs (3G/HD/SD-SDI or ASI signal auto-detection)

2-3-2. MFR-8SDO

MFR-8SDO is an SDI output card and can output 8 of 3G/HD/SD-SDI and ASI signals.
Up to **9** cards can be installed into **Slot No. 09 to 17**.
► See “Input /output cards and Slots” in Sec. 2-2. "MFR-3100EX Rear Panel."

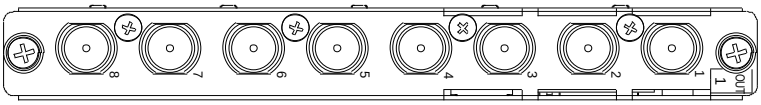

BNC x 8 outputs (3G/HD/SD-SDI or ASI signal depending on crosspoint selections)

2-3-3. MFR-16MV

MFR-16MV is an SDI output card and can output 16 of 3G/HD/SD-SDI and ASI signals.
Up to **4** cards can be installed into **Slot No. 09 to 16**. Two slots are required for each card. Any outputs (BNC) on the card are available for multiview channels. 3G/HD-SDI signals can be output for multiview output.

► See “Input /output cards and Slots” in Sec. 2-2. "MFR-3100EX Rear Panel."
► See Sec. 4. “Multiview Output.”

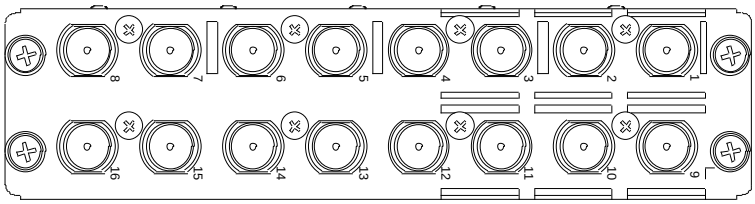

BNC x 16 outputs (3G/HD/SD-SDI or ASI signal depending on crosspoint selections)

2-3-4. MFR-8SDIGB

The MFR-8SDIGB is an SDI input card that accepts 12G/3G-SDI signals and supports Gearbox feature in which video signal conversions between 12G-SDI and Quad Link 3G-SDI, and between 2SI and SQD are available.

► See Sec. 5. “Gearbox Feature (MFR-8SDIGB/8SDOGB).”

The following input combinations are available (Only 1D and 2D BNC connectors can accept 12G-SDI signals):

- 12G-SDI signal * 2
- 3G-SDI signal * 8
- 12G-SDI signal * 1 and 3G-SDI signal * 4

Up to **8** cards can be installed into **Slot No. 01 to 08**.

► See “Input /output cards and Slots” in Sec. 2-2. "MFR-3100EX Rear Panel."

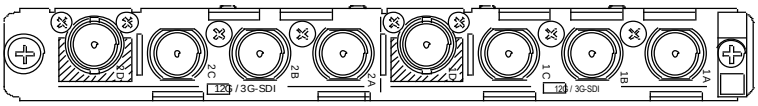

BNC x 8 inputs (12G/3G-SDI)

Set up input signals in the Web-based Control Software as shown below.

◆ **Gearbox settings**

Open the [(**Main Unit Settings)** - **Gearbox Settings** page].
This page allows you to set Gearbox input and output signals, lock mode and delay.

2-3-5. MFR-8SDOGB

The MFR-8SDOGB is an SDI output card that accepts 12G/3G-SDI signals and supports Gearbox feature in which video signal conversions between 12G-SDI and Quad Link 3G-SDI, and between 2SI and SQD are available.
► See Sec. 5. “Gearbox Feature (MFR-8SDIGB/8SDOGB).”

The following output combinations are available (Only 1D and 2D BNC connectors can accept 12G-SDI signals):
:

- 12G-SDI signal * 2
- 3G-SDI signal * 8
- 12G-SDI signal * 1 and 3G-SDI signal * 4

Up to **9** cards can be installed into **Slot No. 09 to 17**.
► See “Input /output cards and Slots” in Sec. 2-2. "MFR-3100EX Rear Panel."

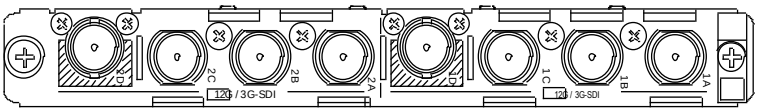

BNC x 8 outputs (12G/3G-SDI)

Set up output signals in the Web-based Control Software as shown below.

◆ **Gearbox settings**
Open the [(**Main Unit Settings)** - **Gearbox Settings** page].
This page allows you to set Gearbox input and output signals, lock mode and delay.

2-3-6. MFR-8SDODL

The MFR-8SDODL is an SDI output card, allowing up to 5H phase adjustment against reference.
► See Sec. 6. “AVDL Function (MFR-8SDODL).”

Up to **9** cards can be installed into **Slot No. 09 to 17**.
► See “Input /output cards and Slots” in Sec. 2-2. "MFR-3100EX Rear Panel."

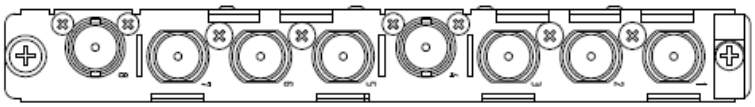
BNC x 8 outputs (3G/HD-SDI)

Set up output signals in the Web-based Control Software as shown below.

◆ **AVDL Settings**
Open the [(**Main Unit Settings)** - **AVDL Settings** page].
This page allows you to set the video format and a delay to be added.

2-4. Audio Input / Output Cards

Source and destination assignment procedures for audio signals are the same as those for SDI signals. Refer to Sec. 2-3. “SDI Input / Output Cards.”
This chapter describes audio specific setup. Audio signals should be setup in the Web-based Control pages
► See [Web-based Control: **Audio Settings** page].

2-4-1. MFR-8AAI (Analog Input)

MFR-8AAI is an analog audio input card with A/D converter.
Up to **8** cards can be installed into **Slot No. 01 to 08**.
► See “Input /output cards and Slots” in Sec. 2-2. "MFR-3100EX Rear Panel."

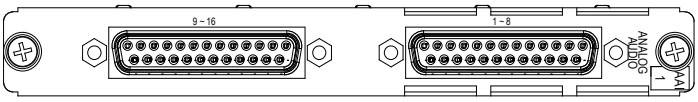

25-pin D-Sub (female) x 2 (8 stereo pairs, 16 channels), 600-ohm or high impedance

◆ **Analog Audio Input**

Select the input impedance and adjust the input level per each stereo pair (2 channels) in the [Web-based Control: **Audio Settings** page].

Analog Input Terminal	Select 600-ohm or High impedance for analog audio input.
Analog Input Termination (*1)	
Analog Input Level	Select the analog audio input level for each stereo pair.
Analog Input Ref Level (*1)	
Analog Input Adjust Gain (*1)	Adjust analog input signal gain for each stereo pair. (Settings: -20dB to 20dB 0.1dB steps for -3dB to +3dB and 1dB steps for other range.)
Digital Output Ref Level (*1)	Sets digital output reference level in A/D conversion. (Settings: -20dBFS, -18dBFS)

(*1) MFR-8AAI FPGA version 1.02.0 or higher

◆ **Analog Audio Connection**

For balanced audio signals, connect the **hot**, **cold** and **shield** conductor to **"+"** ,"**-**" and "**COM"** pins respectively.
For unbalanced audio signals, connect the conductor that carries **audio** to a "**+**" pin and **ground** to "**-**" and "**COM.**"

Analog Audio Connector (25-pin D-sub, female, inch screws) x 2

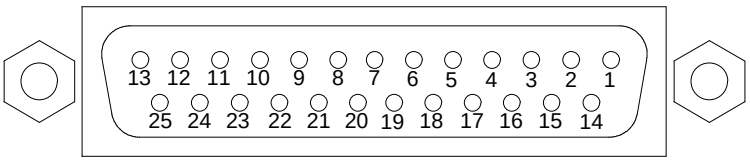

Connector Pin Assignments

Channels 1 to 8

Pin No.	Setting	Pin No.	Setting
13	CH1+	25	CH1 COM
12	CH1-	24	CH2+
11	CH2 COM	23	CH2-
10	CH3+	22	CH3 COM
9	CH3-	21	CH4+
8	CH4 COM	20	CH4-
7	CH5+	19	CH5 COM
6	CH5-	18	CH6+
5	CH6 COM	17	CH6-
4	CH7+	16	CH7 COM
3	CH7-	15	CH8+
2	CH8 COM	14	CH8-
1	SG	-	-

Channels 9 to 16

Pin No.	Setting	Pin No.	Setting
13	CH9+	25	CH9 COM
12	CH9-	24	CH10+
11	CH10 COM	23	CH10-
10	CH11+	22	CH11 COM
9	CH11-	21	CH12+
8	CH12 COM	20	CH12-
7	CH13+	19	CH13 COM
6	CH13-	18	CH14+
5	CH14 COM	17	CH14-
4	CH15+	16	CH15 COM
3	CH15-	15	CH16+
2	CH16 COM	14	CH16-
1	SG	-	-

2-4-2. MFR-8AAO (Analog Output)

MFR-8AAO is an analog audio output card with D/A converter. Up to 9 cards can be installed into **Slot No. 09 to 17**.

► See “Input /output cards and Slots” in Sec. 2-2. "MFR-3100EX Rear Panel."

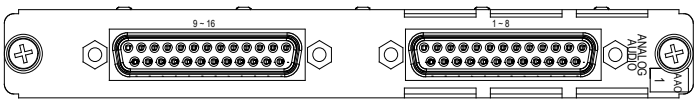

◆ **MUTE**

Mute can be enabled or disabled for each channel.

Mute should be set in the [Web-based Control: **Audio Settings** page].

◆ Digital-to-Analog Conversion

16 channels (8 stereo pairs) can be converted and output as analog audio. Audio level and gain can be set for each stereo pair.
Audio level and gain should be set in the [Web-based Control: **Audio Settings** page].

Digital Input Ref Level	Set digital input ref. level for D/A conversion. (Settings: -20dBFS, -18dBFS)
Analog Output Impedance	Set analog output impedance. (Settings: 600-ohm, 100-ohm)
Analog Output Ref Level	Adjust analog signal output level for each stereo pair. Audio output level is determined by the digital input level settings as shown in the table below. Maximum output level is +24dBm.
Analog Output Adjust Gain	Set the analog output gain in D/A conversion. (Settings: -20dB to 20dB 0.1dB steps for -3dB to +3dB and 1dB steps for other range.)

Analog Output Level (determined by the input level and analog output ref level setting)

Digital audio input level	Analog output ref level setting			
	-10dB	0dB	4dB	8dB
-24dBFS	-14dB	-4dB	0dB	+4dB
-20dBFS	-10dB	0dB	+4dB	+8dB
-18dBFS	-8dB	+2dB	+6dB	+10dB
0dBFS	+10dB	+20dB	+24dB	CLIP

◆ Analog Audio Connection

For balanced audio signals, connect the **hot**, **cold** and **shield** conductor to "**+**" ,"**-** " and "**COM"** pins respectively.
For unbalanced audio signals, connect the conductor that carries **audio** to a "**+**" pin and **ground** to "**COM.**"

Analog Audio Connector (25-pin D-sub, female, inch screws) x 2

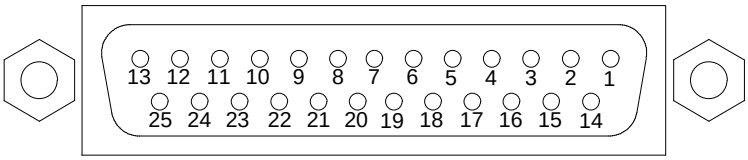

Pin Assignments

Channels 1 to 8

Pin No.	Setting	Pin No.	Setting
13	CH1+	25	CH1 COM
12	CH1-	24	CH2+
11	CH2 COM	23	CH2-
10	CH3+	22	CH3 COM
9	CH3-	21	CH4+
8	CH4 COM	20	CH4-
7	CH5+	19	CH5 COM
6	CH5-	18	CH6+
5	CH6 COM	17	CH6-
4	CH7+	16	CH7 COM
3	CH7-	15	CH8+
2	CH8 COM	14	CH8-
1	SG	-	-

Channels 9 to 16

Pin No.	Setting	Pin No.	Setting
13	CH9+	25	CH9 COM
12	CH9-	24	CH10+
11	CH10 COM	23	CH10-
10	CH11+	22	CH11 COM
9	CH11-	21	CH12+
8	CH12 COM	20	CH12-
7	CH13+	19	CH13 COM
6	CH13-	18	CH14+
5	CH14 COM	17	CH14-
4	CH15+	16	CH15 COM
3	CH15-	15	CH16+
2	CH16 COM	14	CH16-
1	SG	-	-

2-4-3. MFR-8AESI (AES/EBU Input)

MFR-8AESI is a digital audio input card.
Up to **8** cards can be installed into **Slot No. 01 to 08**.
► See “Input /output cards and Slots” in Sec. 2-2. "MFR-3100EX Rear Panel."

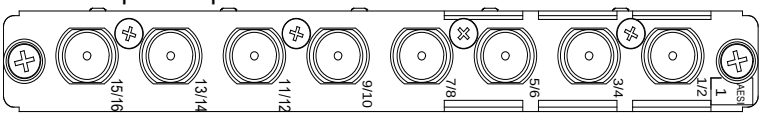

BNC x 8 inputs (8 stereo pairs, 16 channels), unbalanced, 75-ohm

2-4-4. MFR-8AESO (AES/EBU Output)

MFR-8AESO is a digital audio output card.
Up to **9** cards can be installed into **Slot No. 09 to 17**.
► See “Input /output cards and Slots” in Sec. 2-2. "MFR-3100EX Rear Panel."

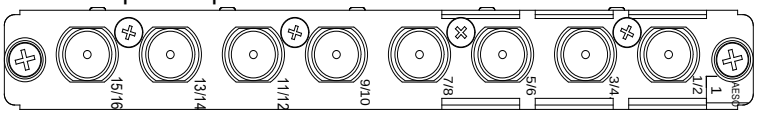

BNC x 8 outputs (8 stereo pairs, 16 channels), unbalanced, 75-ohm

2-4-5. MFR-8SDI (MADI Input)

MFR-8SDI is an SDI or digital audio input card.
When using as an SDI input, refer to Sec. 2-3-1 “MFR-8SDI” for details.
When using as a digital audio input, it can accept 8 MADI signals.
Up to **8** cards can be installed into **Slot No. 01 to 08**.
► See “Input /output cards and Slots” in Sec.2-2. "MFR-3100EX Rear Panel."

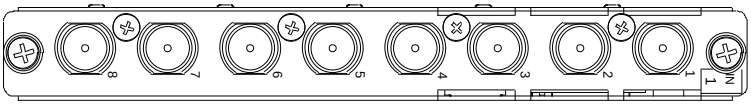

BNC x 8 inputs (64 audio channels per input) unbalanced 75-ohm

2-4-6. MFR-8MADIPO (MADI/SDI Output)

MFR-16MADIPO is a digital audio/ video output card.
Maps audio input channels in SDI / AES/EBU / MADI streams and outputs as MADI / SDI signals.
Up to **9** cards can be installed into **Slot No. 09 to 17.**
► See “Input /output cards and Slots” in Sec. 2-2 "MFR-3100EX Rear Panel."

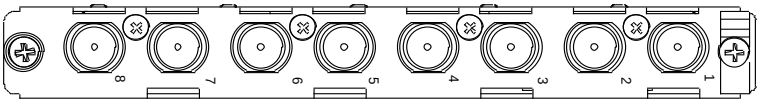

BNC x 8 outputs (MADI/SDI x 8) 75-ohm

◆ Supported formats

SDI input SDI output	3G-SDI	1080/59.94p, 1080/50p
	HD-SDI	1080/59.94i, 1080/50i, 1080/29.97PsF, 1080/23.98PsF, 720/59.94p
Audio input (48kHz / 24bit)		MADI (64-channel only), AES/EBU
Audio output (48kHz / 24bit)		MADI (64-channel only)

IMPORTANT

Sampling Rate Converter is not equipped with the card.
Inputting audio should be synchronized with the router REF (reference) input.

The following functions are available and managed by a group of 8 streams.

◆ Mapping

Selects the input type from SDI, MADI (1-32), MADI (33-64) or AES and the output type from SDI or MADI, and maps audio sources to outputs per physical channel (stream).
Set **Mapping** in [Web-based Control: **Audio Settings** page].

If **MADI** is selected under Output Type, audio sources of last half channels (33-64) cannot be assigned, but are automatically set according to the input signal type. (See the table below.)

Output Type Setting	MADI Output Stream	Input Type Setting			
		SDI	MADI (1-32)	MADI (33-64)	AES
MADI	First half 32 channels (Ch 1-32)	Mapped audio source channels			
	Last half 32 channels (Ch 33-64)	Muted	33-64 channels of MADI input stream	1-32 channels of MADI input stream	Muted

◆ **Link**

Able to set the preset mapping linked with logical channel (crosspoint) switch.
Set **Link** in [Web-based Control: **Audio Settings - Audio Mapping** page].

◆ **V-Fade**

Able to erase crosspoint switch noise by setting fade-in duration time.
(Fade-out duration time is about 4 ms.)
Set **V-Fade** in [Web-based Control: **Audio Settings - V-Fade/Mute** page].

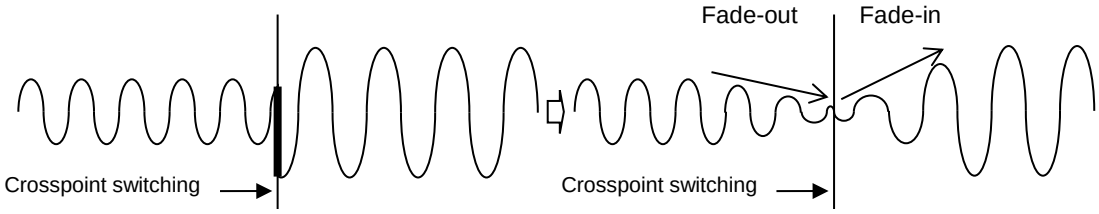

◆ **Mute**

Able to mute the output for each physical channel (stream).
Set **Mute** in [Web-based Control: **Audio Settings - V-Fade/Mute** page].

◆ **Bypass**

Able to pass-through input signal to output without processing.
* For MADI and AES/EBU, asynchronous input audio can also be bypassed, but for SDI.
Set **Bypass** in [Web-based Control: **Audio Settings - Output Type** page].

◆ **Output Delay**

A delay can be added to SDI output. (0.2H to 1.0H from the reference. See the table below.)
Adding delay widens the range of SDI reference adjustment and SDI input can be locked if it is delayed against the reference.

SDI Delay (Delay Time in µs)

SDI Format	0.2H	0.3H	0.4H	0.5H	0.6H	0.7H	0.8H	0.9H	1.0H
1080/59.94i	5.93	8.90	11.86	14.83	17.80	20.76	23.73	26.69	29.66
1080/59.94p	2.97	4.45	5.93	7.41	8.90	10.38	11.86	13.35	14.83
1080/50i	7.11	10.67	14.22	17.78	21.33	24.89	28.44	32.00	35.56
1080/50p	3.56	5.33	7.11	8.89	10.67	12.44	14.22	16.00	17.78
1080/29.97PsF	5.93	8.90	11.86	14.83	17.80	20.76	23.73	26.69	29.66
1080/23.98PsF	7.41	11.12	14.83	18.54	22.24	25.95	29.66	33.37	37.07
720/59.94p	4.45	6.67	8.90	11.12	13.35	15.57	17.80	20.02	22.24

2-4-7. MFR-8AESPO (AES/EBU Output)

MFR-8AESPO is a digital audio output card.
It outputs AES/EBU signals by mapping SDI, AES/EBU and MADI audio input sources.
Up to 9 cards can be installed into **Slot No. 09 to 17.**
► See “Input /output cards and Slots” in Sec. 2-2 "MFR-3100EX Rear Panel."

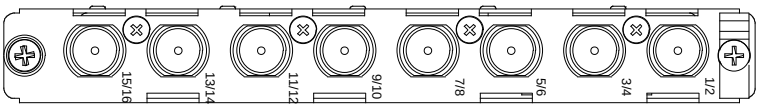

BNC x 8 outputs (AES/EBU x 8)

◆ **Supported formats**

SDI input (embedded audio)	3G-SDI	1080/59.94p, 1080/50p
	HD-SDI	1080/59.94i, 1080/50i, 1080/29.97PsF, 1080/23.98PsF, 720/59.94p
Audio input (48 kHz / 24bit)		MADI (64-channel only), AES/EBU
Audio output (48 kHz / 24bit)		AES/EBU

Following functions are available as with MFR-8MADIPO (managed by a group of 8 streams).
Mapping, **Link**, **V-Fade**, **Mute** and **Bypass**

IMPORTANT

Sampling Rate Converter is not equipped with the card.
Inputting audio should be synchronized with the router REF (reference) input.

2-5. MFR-GPI

2-5-1. Front Panel

Char.	Item	Description
A	POWER	Displays the power status. ► See the table below for details on indications.
B	BUSY	Displays the flash memory writing status of backup settings. ► See the table below for details on indications.
C	GPI	When the GPI function is assigned using the Web-based Control, the LED lights green. The LED remains unlit when there is no assignment.
D	SERIAL 1-4	When a serial port is assigned using the Web-based Control, the LED lights green. The LED remains unlit when there is no assignment.
E	RESET	Used to re-initialize the GPI unit.

◆ **Color indications on the MFR-GPI front panel**

LED \ LED Color	Green	Red	Orange
POWER	Normal	Power alarm	
BUSY	Normal processing		Writing to flash memory

* POWER LED lights red if the unit is turned on but is unconnected to a network.

IMPORTANT

After finishing settings, do **not power OFF** the unit while BUSY LED is **lit orange**, since the system is writing to flash memory. (It takes about two minutes at max.)

2-5-2. Rear Panel

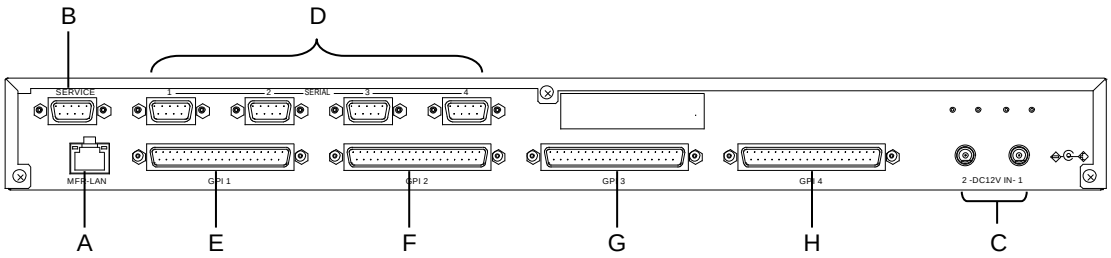

Char.	Item	Description
A	MFR-LAN (*1)	Used to connect the MFR main unit Ethernet port (10/100BASE-TX)
B	SERVICE	Used for maintenance only. Do not use.
C	DC 12 V IN 1 and 2	Used to supply 12 V DC power.
D	SERIAL1 to 4	Used for serial interface control. The default setting is RS-232C. RS-422 is also selectable using switches on the internal card. ► See Sec. 2-5-4. “Switches on the Card.” Pin assignments are the same as those on the MFR main unit. ► See Sec. 2-5-3. “Interfaces.”
E	GPI 1 (Port no. 1)	Used for GPI input / output connections. (32 total assignable inputs and outputs)
F	GPI 2 (Port no. 2)	Used for GPI input / output connections. (32 total assignable inputs and outputs)
G	GPI 3 (Port no. 3)	Used for GPI input / output connections. (32 total assignable inputs and outputs)
H	GPI 4 (Port no. 4)	Used for GPI input / output connections. (32 total assignable inputs and outputs)

(*1) The MFR-LAN connector may be labeled 10/100BASE-T on the previous model.

2-5-3. Interfaces

◆ **GPI IN / TALLY OUT Connector (37-pin D-sub, female)**

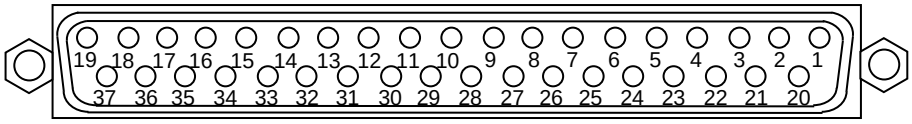

Pin No.	Signal	Pin No.	Signal
1	GPI_IN / TALLY_OUT # - 01	20	GPI_IN / TALLY_OUT # - 20
2	GPI_IN / TALLY_OUT # - 02	21	GPI_IN / TALLY_OUT # - 21
3	GPI_IN / TALLY_OUT # - 03	22	GPI_IN / TALLY_OUT # - 22
4	GPI_IN / TALLY_OUT # - 04	23	GPI_IN / TALLY_OUT # - 23
5	GPI_IN / TALLY_OUT # - 05	24	GPI_IN / TALLY_OUT # - 24
6	GPI_IN / TALLY_OUT # - 06	25	GPI_IN / TALLY_OUT # - 25
7	GPI_IN / TALLY_OUT # - 07	26	GPI_IN / TALLY_OUT # - 26
8	GPI_IN / TALLY_OUT # - 08	27	GPI_IN / TALLY_OUT # - 27
9	GPI_IN / TALLY_OUT # - 09	28	GPI_IN / TALLY_OUT # - 28
10	GPI_IN / TALLY_OUT # - 10	29	GPI_IN / TALLY_OUT # - 29
11	GPI_IN / TALLY_OUT # - 11	30	GPI_IN / TALLY_OUT # - 30
12	GPI_IN / TALLY_OUT # - 12	31	GPI_IN / TALLY_OUT # - 31
13	GPI_IN / TALLY_OUT # - 13	32	GPI_IN / TALLY_OUT # - 32
14	GPI_IN / TALLY_OUT # - 14	33	Frame ground
15	GPI_IN / TALLY_OUT # - 15	34	Frame ground
16	GPI_IN / TALLY_OUT # - 16	35	Frame ground
17	GPI_IN / TALLY_OUT # - 17	36	+4.8V output
18	GPI_IN / TALLY_OUT # - 18	37	+4.8V output
19	GPI_IN / TALLY_OUT # - 19		

* The symbol "#" at the end of signals represents the port number (1, 2, 3 or 4).
* The maximum total output current for all +4.8 V outputs is 1.5 A.
* The GPI input pulse width should be 54 ms or more.

◆ **GPI IN Circuits**

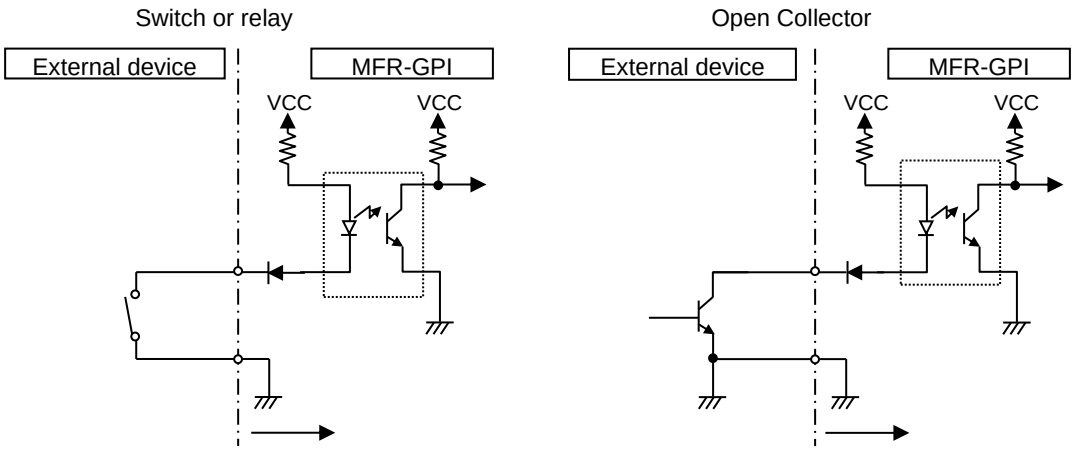

◆ **GPI OUT / TALLY OUT Circuit**

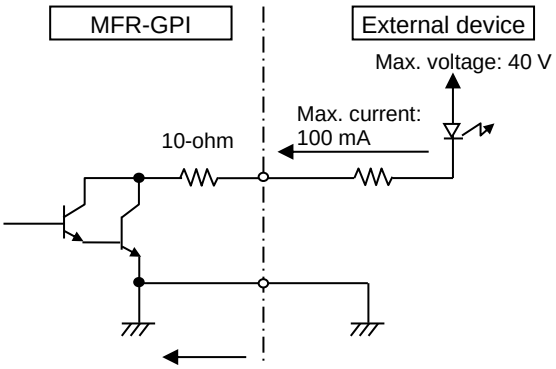

* The voltage is about 0.9 V when turned-on.

◆ **SERIAL Connector (9-pin D-sub, male)**

RS-232C or 422 interfaces can be selected via the CPU card DIP switches.
(See Sec. 2-5-4. "Switches on the Card"

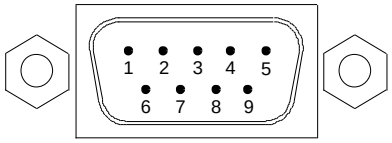

RS-422 connector pin assignment (Factory default settings)

Pin No.	Signal Name	Description
1	FG	Frame Ground
2	T-	Transmit data (-)
3	R+	Receive data (+)
4	SG	Signal Ground
5	NC	Unused
6	SG	Signal Ground
7	T+	Transmit data (+)
8	R-	Receive data (-)
9	FG	Frame Ground

* The maximum cable length is 100 m.

RS-232C connector pin assignment

Pin No.	Signal Name	Description
1	NC	Not used
2	RxD	Received Data
3	TxD	Transmitted Data
4	DTR	Data Terminal Ready
5	SG	Signal Ground
6	DSR	Data Set Ready
7	RTS	Request To Send
8	CTS	Clear To Send
9	NC	Not used

* The maximum cable length is 10 m.
* DTR/DSR and RTS/CTS are internally connected respectively.

2-5-4. Switches on the Card

IMPORTANT

Do not access internal cards or make connections with the unit powered ON. Always power OFF all connected units / disconnect power cords prior to accessing the interior.

Further note that adjustments and maintenance should only be performed by qualified technical personnel familiar with FOR-A equipment.

Remove the two screws on both sides of the MFR-GPI to access the internal card as shown below. The figure below shows the factory default switch settings.

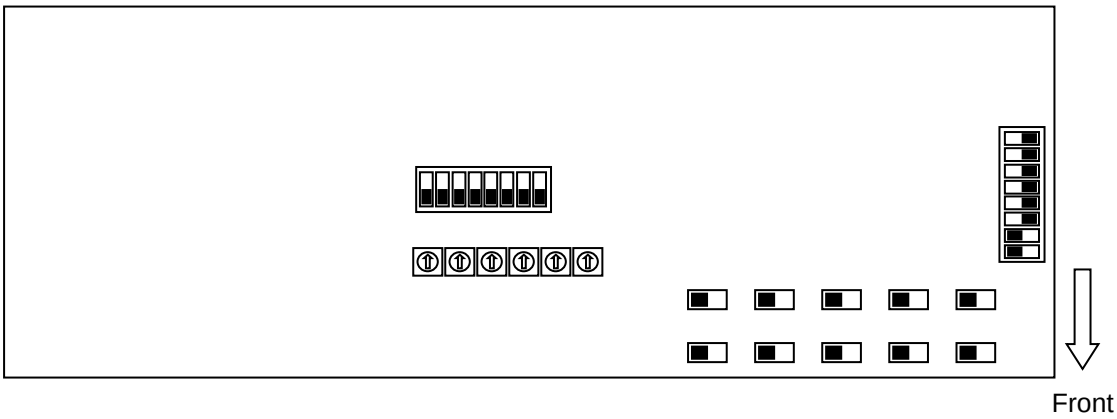

Switch	Function / Settings			
S2, S3	Used for maintenance. Do not use.			
S4	Used for maintenance. Do not use. (The factory default setting is as shown at right. The black boxes (■) represent switches.)	ON OFF		
S5, S6, S7, S8, S9, S10	Used for maintenance. Do not use.			
S11	Used for maintenance. Do not use.	ON OFF		
S12, S14	Used to select RS-232C/RS-422 for SERIAL 1. The default setting is RS-232C (both switches to the left). To change to RS-422, set both switches to the right.	Switch Settings	RS-232C (Factory default setting)	
S13, S15	Used to select RS-232C/RS-422 for SERIAL 2. The default setting is RS-232C (both switches to the left). To change to RS-422, set both switches to the right.			
S16, S18	Used to select RS-232C/RS-422 for SERIAL 3. The default setting is RS-232C (both switches to the left). To change to RS-422, set both switches to the right.		RS-422	
S17, S19	Used to select RS-232C/RS-422 for SERIAL 4. The default setting is RS-232C (both switches to the left). To change to RS-422, set both switches to the right.			

2-6. MFR-TALM

2-6-1. Front Panel

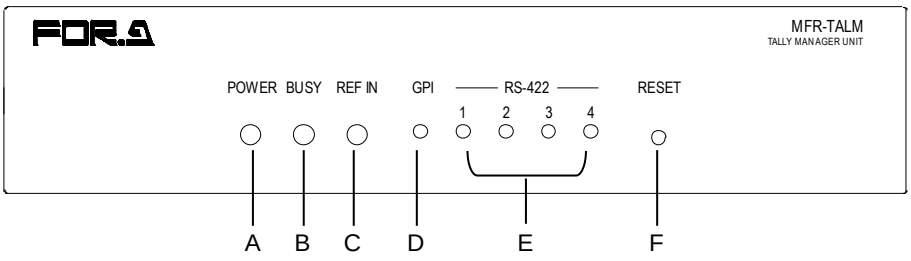

Char.	Item	Description
A	POWER	Displays the power status. ► See the table below for details on indications.
B	BUSY	Displays the flash memory writing status of backup settings. ► See the table below for details on indications.
C	REF IN	Lights green when an external reference signal is present.
D	GPI	Lights green when a GPI function is assigned by Web-based Control. Turns off when no GPI function is assigned.
E	RS-422 1-4	Lights green when a port function is assigned by Web-based Control. Turns off when no port function is assigned.
F	RESET	Resets MFR-TALM.

◆ **Color indications on the MFR-TALM front panel**

LED Color / LED	Green	Red	Orange
POWER	Normal	Power alarm	
BUSY	Normal processing		Writing to flash memory

IMPORTANT

Do not power off the unit while BUSY LED is lit orange (writing to the flash memory, about 2 minutes at most).

2-6-2. Rear Panel

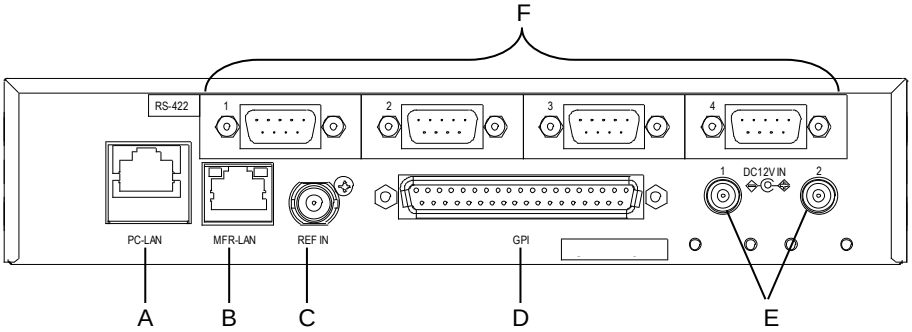

Char.	Item	Description
A	PC-LAN	Ethernet port for connection to PC or other external unit (10/100BASE-TX, RJ-45)
B	MFR-LAN	Ethernet port for connection to MFR main unit (10/100/1000BASE-T, RJ-45)
C	REF IN	Used to input a reference signal (BB or Tri-level sync signal)
D	GPI	Used to input/output GPI signals for external control. (32 total assignable inputs and outputs) Pin assignments are the same as those of the MFR-GPI connectors. ► See Sec. 2-5-3. "Interfaces."
E	DC 12 V IN 1,2	Used to supply 12 V DC power.
F	RS-422 1-4	Used for RS-422 interface control. Pin assignments are the same as those of the MFR main unit. ► See Sec. 2-5-3. "Interfaces."

3. System Configuration Example

3-1. Basic Configuration

The block diagram below shows an example of the basic MFR routing system that consists of an MFR-3100EX, Remote Unit and the Web-based Control accessed from a computer.
Make sure to connect both MFR-LAN1 (MFR-31CPU) and MFR-LAN2 (MFR-3100EX) to a LAN respectively for CPU redundancy. Their LAN connections must be separated from the network segment of PC-LAN and other devices. (Default IP addresses (Net mask: 255.255.255.0) are used in the configuration example below.)

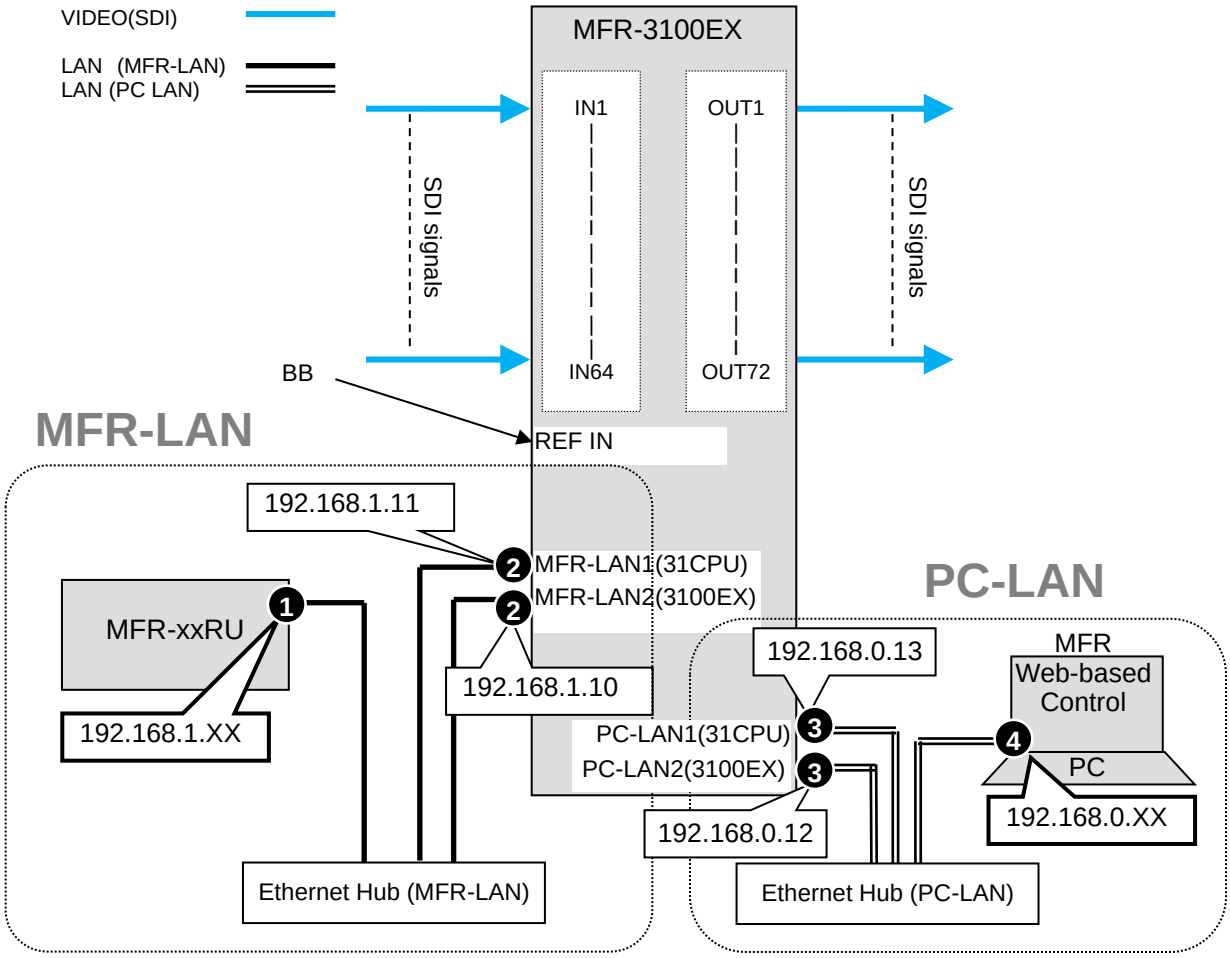

◆ **LAN Port Settings**

Port	RU Front Panel (Sec. in MFR-RU Series Operation Manual)	Web-based Control
❶	MFR-39RUA: "Setting Mode Menu (MFR-39RUA)" MFR-18RUA: "Setup Menu (MFR-18RUA)" MFR-16RUTA: "Setup Menu (MFR-16RUTA)" MFR-8RUA: "Setup Menu (MFR-8RUA)" Other RUs: "Setup Menu (MFR-16/40RU, MFR-16RUD, MFR-16/32/64RUW)"	**RU Settings** page
❷	---	**MU Settings** page
❸	MFR-39RUA: "Setting Mode Menu (MFR-39RUA)" (Display only) MFR-18RUA: "Setup Menu (MFR-18RUA)" (Display only) MFR-16RUTA: "Setup Menu (MFR-16RUTA)" (Display only) MFR-8RUA: "Setup Menu (MFR-8RUA)" (Display only) Other RUs: "Setup Menu (MFR-16RU/40RU, MFR-16RUD, MFR-16/32/64RUW)"(Display only)	**Network Settings** page

3-2. Main Unit Linking

The Main Unit Link feature allows you to control multiple MFR-3100EX units at the same time. Two types of system configurations are available:

Parallel Link:	Controls several MFR-3100EX units at the same time.
Expanded Matrix:	Creates an expanded virtual matrix by linking MFR-3100EX units.

Note that each Expanded Matrix system requires specific BNC connections. **IP port and SNMP settings** should be performed on **each** MFR-3100EX unit. After these settings are completed, all linked MFR-3100EX units are set and **controlled** together on the unit that is specified as **Master**.

Main Unit Link Specifications
- Main Unit Link systems are set and controlled through a specified **master** unit. Up to **2** MFR-3100EX units can be linked within a system. - Only **SDI** signals can be routed in **Expanded Matrix** systems. - All MFR main units in a link system must be linked together and independent units cannot exist in the system. - If an option card of MFR-8SDIGB / 8SDOGB / 8SDODL / 8MADIPO / 8AESPO is installed, the MFR main unit should behave as a Master.

3-2-1. Parallel Link System Example

The system example below is a redundant system using two MFR-3100EX units.

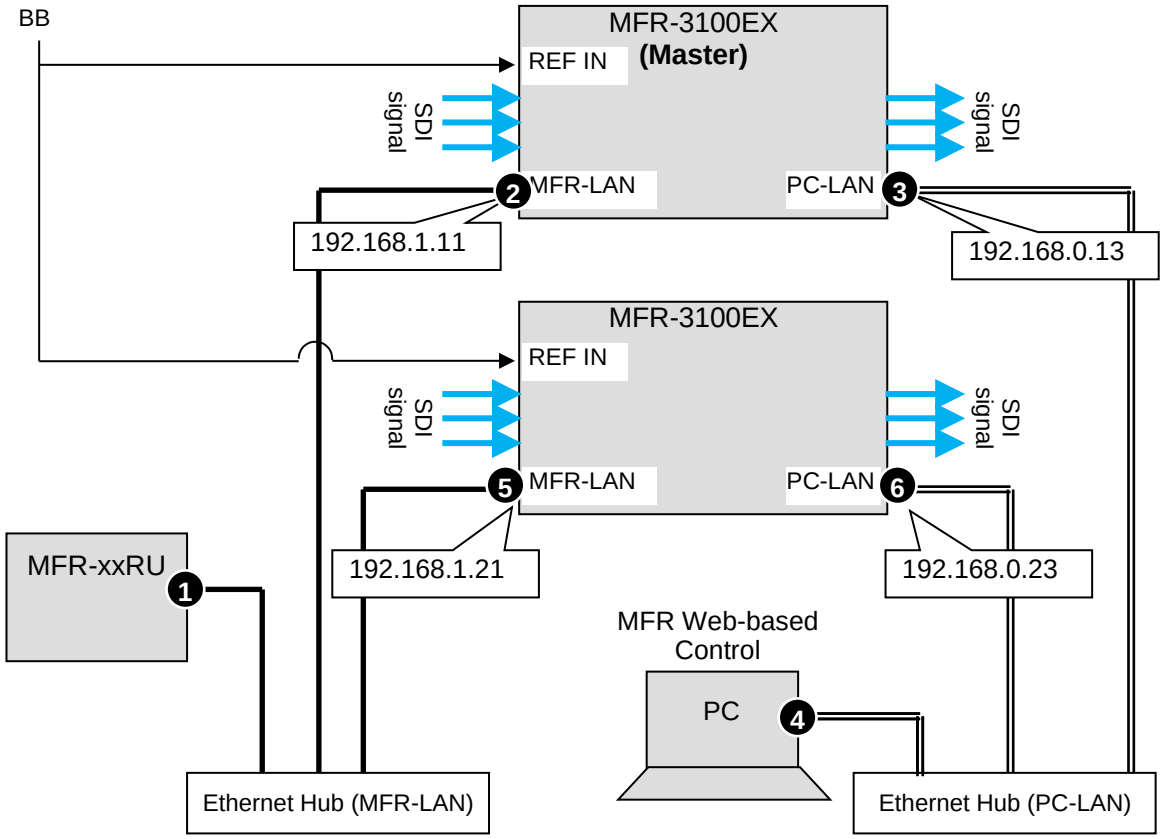

Note that in all MFR-31CPU units the IP address of MFR-LAN1 is set to 192.168.1.11 and that of PC-LAN1 to 192.168.0.13 as factory default. In all MFR-3100EX units the IP address of MFR-LAN2 is set to 192.168.1.10 and that of PC-LAN2 to 192.168.0.12. To prevent IP address overlap in a system, you need to change IP addresses of either unit.

Also note that desired IP addresses can be set for system devices according to your network conditions.

Setup Procedure

1) Connect all devices in the MFR system as shown in the figure in the previous page. Power on the MFR-3100EX to be set as a Master, Remote Control unit and PC. Set the IP addresses for the Remote Control unit (❶) and PC (❹). Power off the MFR-3100EX.
2) Power on another MFR-3100EX. Set the IP addresses (❺ and ❻) as shown in the previous page.
3) Power on the Master MFR-3100EX.
4) Connect to the Master MFR-3100EX Web-based control and open the **Build Setting** page. Check on **Build Enable** to enable the Main Unit Link feature.

▶ See "Main Unit Link" in the Web-based Control Operation Manual.

3-2-2. Expanded Matrix System Example

The system example below connects two MFR-3100EX units to form a 96 x 32 virtual matrix.

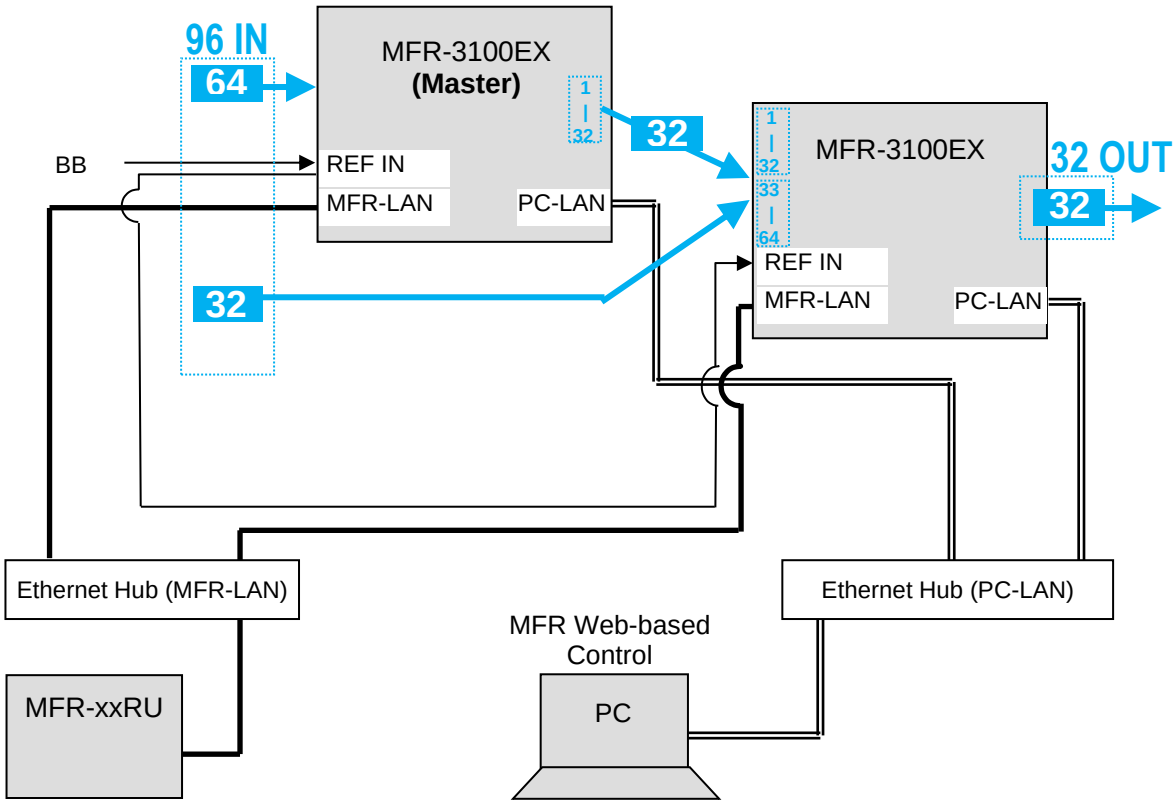

◆ **Setup Procedure**

1) Connect two MFR-3100EX units, one by one, to the MFR system, referring to the previous chapter for details on to setting network settings. Do not use the same IP address twice in the system.
2) Turn on both MFR-3100EX power supplies. Connect BNC cables.
3) Connect to the Web-based Control of an MFR-3100EX and open the **Build Setting** page. Check on **Build Enable** to enable the Main Unit Link feature.

▶ See "Main Unit Link" in the Web-based Control Operation Manual.

3-3. Signal Name and Tally Link System

3-3-1. Standard Configuration

The block diagram below shows a basic signal name and tally link system.

To connect a video switcher via serial connection, use SERIAL1-4 on MFR-GPI. The signal name and tally link system require an RS-422 interface.

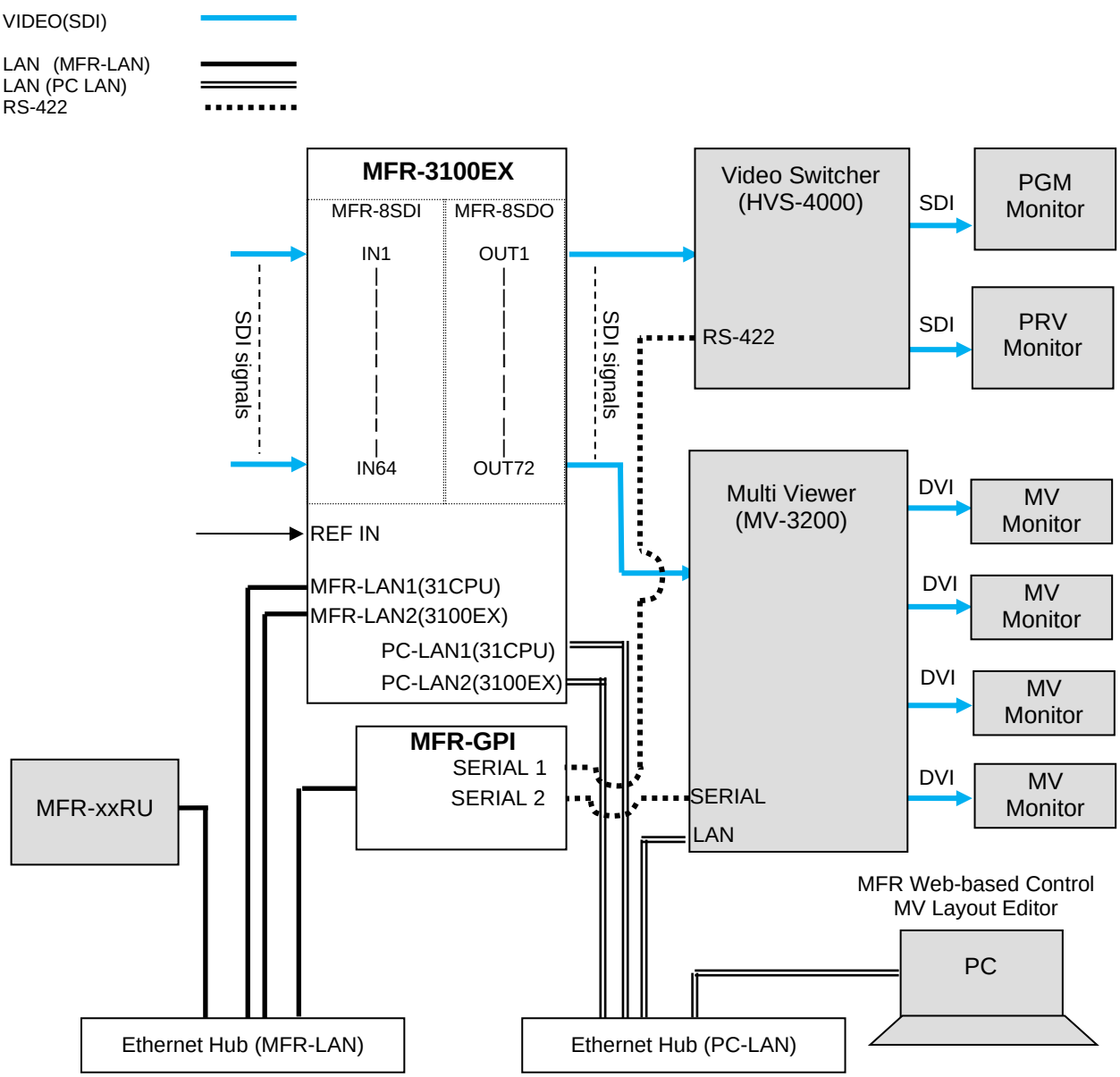

◆ Transmitting Signal Name and Tally Data

The figure below shows the routing of signal name and tally data.

> Set each serial port following the table on this page using the MFR Web-based Control and on the switcher.
> Each tally information setting should be performed in the [Web-based Control: **Tally System Settings** page].

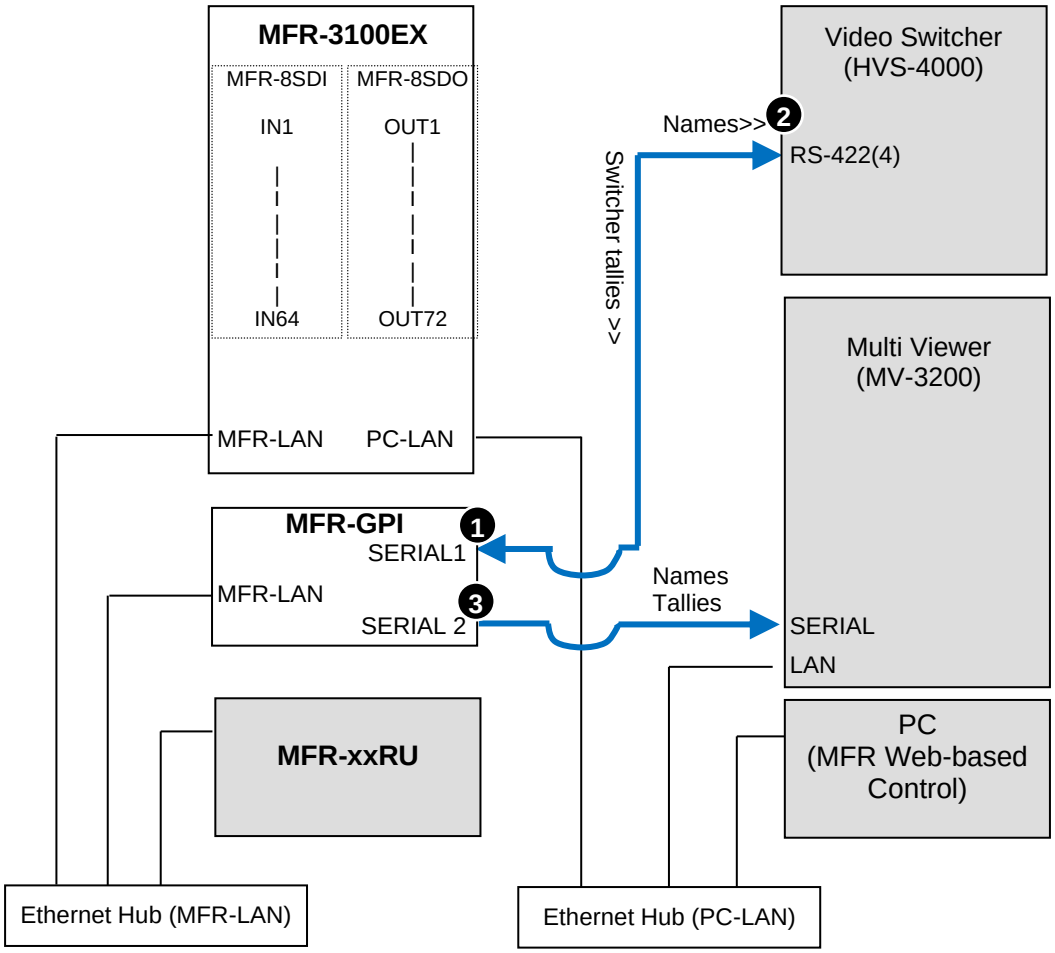

◆ Serial Port Settings

Port	Menu	[Port Settings] - [Serial Port]			
		Connector	Function	Baud rate	Parity
❶	Web-based Control [Port Settings]	(GPI) No. 1	Router/HVS connection type 2	38400	NONE
❷	HVS-4000 [EXT INTERFACE - RS-422]		ROUTER(Tx)	38400	NONE
❸	Web-based Control [Port Settings]	(GPI) No. 2	Tally out (TSL Ver. 3.1)	38400	EVEN

◆ Other Parameter Settings (in HVS-4000)

To send tallies to the router, set [TALLY ENABLE] in the ROUTER menu to [ON].
To receive source names from the router, set [SIGNAL ENABLE] in the ROUTER menu to [ON].

3-3-2. If Configuring an MFR-TALM

The block diagram below shows an example signal name and tally link system comprised of a FOR-A video switcher and multiviewer using an MFR-TALM unit. The MFR-TALM is specifically designed to perform the task of tally data computation, which is ordinarily undertaken by the MFR-3100EX, to accelerate the computation. RS-422 ports (1) to (4) are available for video switcher connection.

> Before using an MFR-TALM unit for the system, change **Tally Control Unit** to **MFR-TALM** in the [**Main unit** Web-based Control: **MU Settings** page].

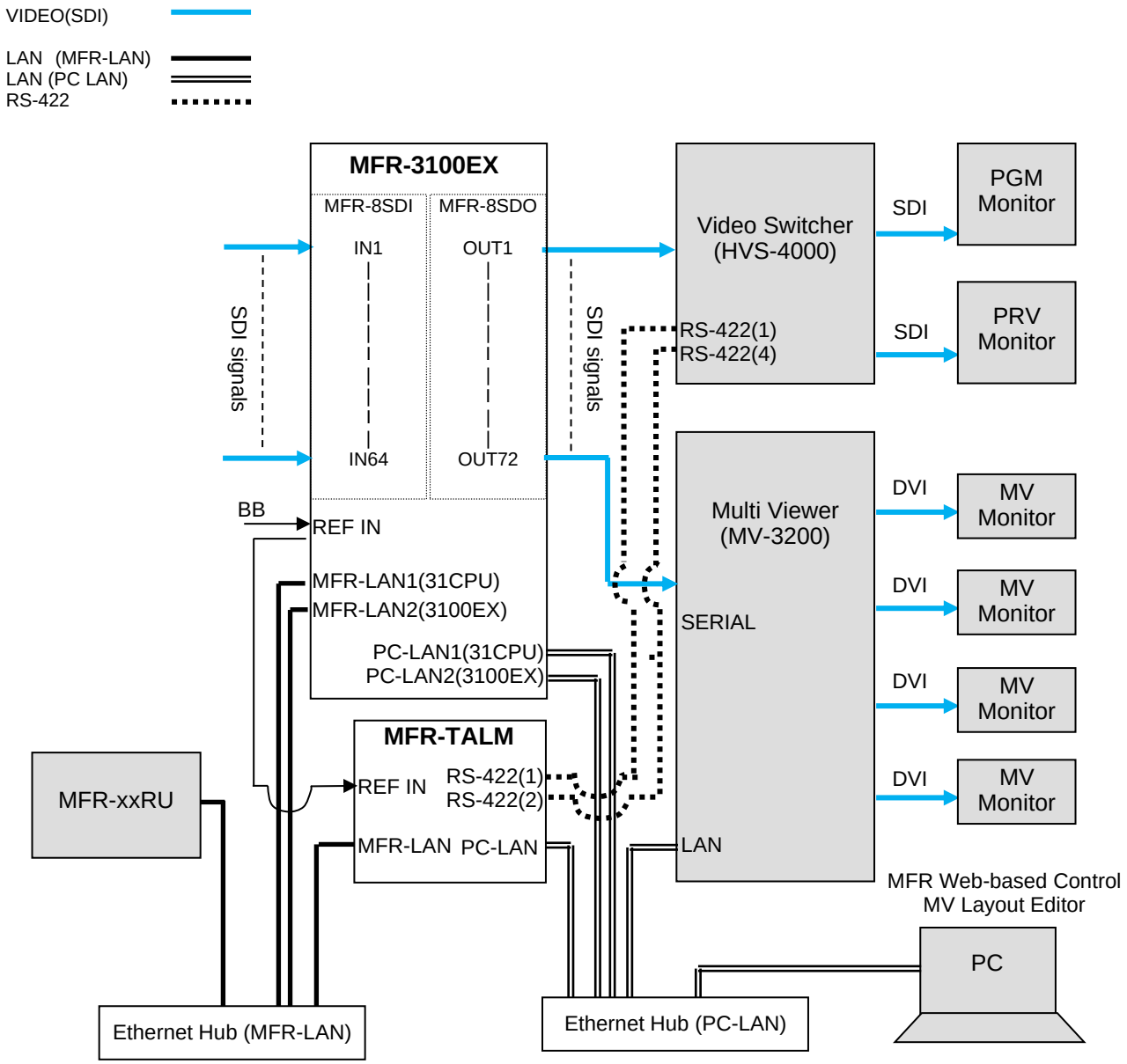

◆ Transmitting Signal Name and Tally Data

The figure below shows an example signal name and tally data routing system using the MFR-TALM.

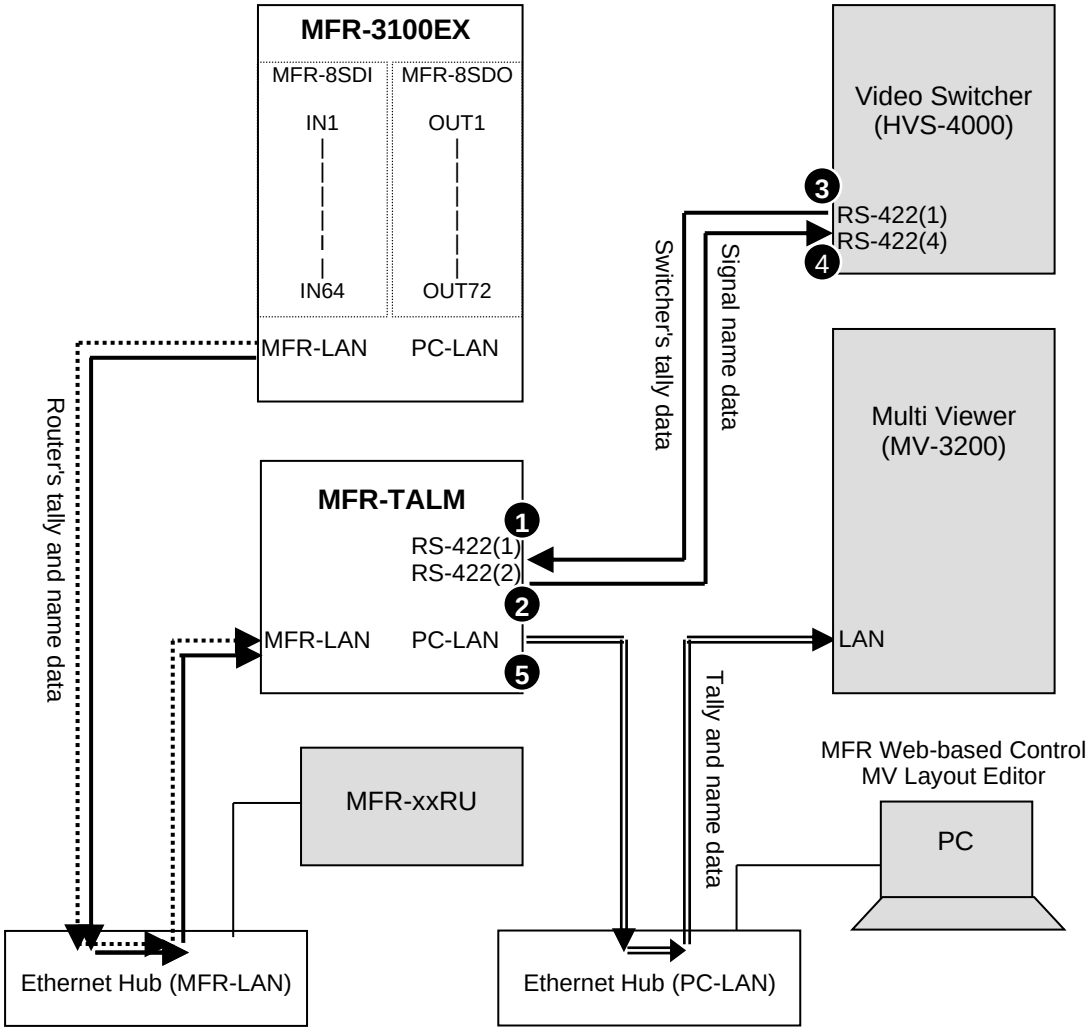

Each serial port should be set as shown in the table below in the relevant page of the **MFR-TALM** Web-based Control accessed from "**http://192.168.1.62**" (default IP address) on your web browser.

Serial Port Settings

Open the [MFR-TALM Web-based Control: **Port Settings - Serial Port** page] and perform port settings.

As for the HVS-4000 unit, perform port setting in the [EXT INTERFACE - RS-422] menu.

Port	Menu	[Port Settings] - [Serial Port]			
		Connector	Function	Baud rate	Parity
❶	Web-based Control [TALM Settings]	No. 1	HVS-TAL Protocol Reception	38400	EVEN
❷	Web-based Control [TALM Settings]	No. 2	Router/HVS connection type 2	38400	NONE
❸	HVS-4000 [EXT INTERFACE - RS-422]	No. 1	TALLY	38400	EVEN
❹	HVS-4000 [EXT INTERFACE - RS-422]	No. 4	ROUTER (Tx)	38400	NONE

TCP/IP Setting

Open the [MFR-TALM Web-based Control: **Port Settings - TCP/IP** page] and perform port settings

Port	Menu	[Port Settings] - [TCP/IP]			
		Access Method	IP Address	Port	Function
❺	Web-based Control [TALM Settings]	Client	(MV IP address)	(MV TCP/IP port number)	TSL UMD protocol V5.0 Tally out

Encode	DLE	Screen No.	ID Range
ASCII / Unicode(Kanji) / Unicode(Import) (Choose the character set)	ON/OFF (Set the same as in MV)	(Set the same as in MV)	Set the TSL ID range to be sent to MV

◆ **Data transmission settings between HVS-4000 and MFR-TALM**

<HVS-4000 side>

- To send tally data to the router from the switcher. Set **TALLY ENABLE** in the ROUTER menu to **ON**.
- To receive name data from the router, set **SIGNAL ENABLE** in the ROUTER menu to **ON.**
- Perform the TALLY COLOR and TALLY UNIT 1, 3 and 5 settings so that the MFR-TALM unit can receive switcher tally data.

<MFR-TALM-side>

- Open the [MFR-TALM Web-based Control: **HVS-TAL Protocol Reception** page] and perform the same tally settings as those in HVS-4000.

The tally settings in the MFR system must be entered in the [MFR-TALM Web-based Control: **Assign Tally** page]. When using MFR-TALM for tally control, the [Main unit Web-based Control: **Tally System Settings** page] and its subpages are all disabled.

Refer to your Multiviewer operation manual for the details on how to handle tally data on the multiviewer.

3-4. Switcher's AUX Crosspoints Switching System

This system enables the following two features:

- Switches AUX crosspoints on a switcher using an MFR Series Remote Unit or serial commands.
- Switches AUX crosspoints on a switcher as well as the corresponding crosspoints on the MFR-3100EX, if the MFR-3100EX provides video sources to the switcher.

Supported switcher: **HVS-100/110, HVS-390HS, HVS-490, HVS-1200, HVS-2000, HVS-6000**

◆ **System Example**

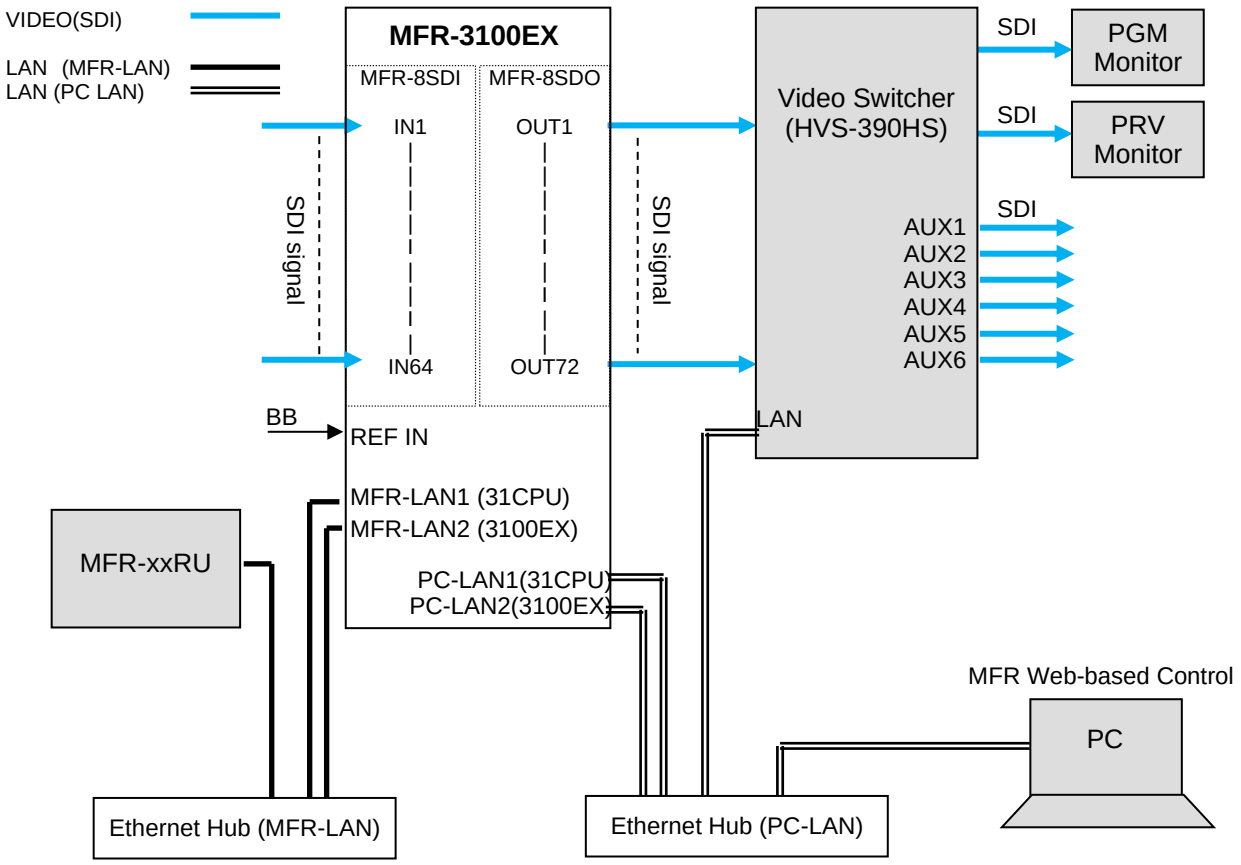

3-4-1. Switching an AUX Bus Signal

Assume that the system is configured as shown below:
AUX1 on the switcher is assigned to **DST 129** (Level 1) on the MFR-3100EX.
IN1-8 and **STL**(Still) **3** on the switcher are assigned to **SRC129-137** on the MFR-3100EX.

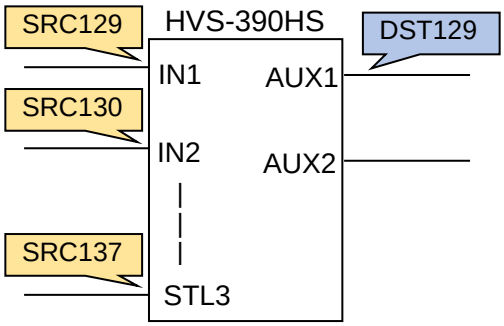

◆ **Setup Settings**

1) Connect and assign video signals as shown in the figure on the previous page.
2) Device Setup on the MFR-3100EX:
   Connect to the MFR-3100EX from the Web-based Control PC and open the [**Tally System Settings - Device Select**] page. Select **HVS-390HS** in the [**Switcher**] field and click [**Send**].
3) Network settings on the MFR-3100EX:
   Open the [**Router System Settings - Port Settings**] page and set the TCP/IP menu as shown below.

IP Address	Port	Protocol	Function	Local Port (MFR)
(Switcher's IP address)	See below	UDP	Editor (HVS)	Select a UDP port number from 23, 49152 - 65534. Do not use the UDP port number (Default: 23) already used in the Server (MFR).

Switcher	Port
HVS-100/110	8740
HVS-390HS	8740
HVS-490	8740
HVS-1200	8740
HVS-2000	53381
HVS-6000	53381

4) Assign AUX buses and input channels on the switcher to logical destination and sources channels on the MFR-3100EX.

   <AUX bus assignments>
   a) Open the **Destination Assignment** page.
   b) Select **HVS(AUX)** of [Unit: HVS-390HS] under **Select Table**.
   c) Set **Level** to **1**.
   d) Assign **AUX1** to **DST 129**.

   <Input channel assignments>
   a) Open the **Source Assignment** page.
   b) Select **HVS(AUX)** of [Unit: HVS-390HS] under **Select Table**.
   c) Set **Level** to **1**.
   d) Assign input channels to MFR sources as shown below.

Logical No./Name		Switcher Channel
129	SRC 129	IN1
|	|	|
136	SRC 136	IN8
137	SRC 137	STL3

5) Settings on the switcher:
   Open the [SETUP - EXT I/F - EDITOR] menu on the HVS-390HS.
   Change [TYPE] to [**DVS**] and [ENABLE] to [**ON**].

After above setup settings are complete:

- If **SRC 129** is selected for **DST 129**, **AUX1** outputs **IN1** video on the switcher.
- If **SRC 137** is selected for **DST 129**, **AUX1** outputs **STL 3** video on the switcher.
- If **IN4** is selected for **AUX1** on the switcher, **SRC 132** is selected for **DST 129** on the MFR-3100EX.

If input channels that are not assigned in the **Source Assignment** page are selected on the switcher, they are replaced with the Alternative Source set in the **Source Assignment** page in the MFR system.

3-4-2. Synchronous Crosspoints Switching

1) to 3) Configure the system as described in Sec. 3-4-1.

4) Configure channel link settings:

Open the **Re-Entry** page and set the menu page as shown below.

Output	Input
Router OUT 61	HVS-390HS IN9 > AUX 1
Router OUT 62	HVS-390HS IN10 > AUX 2

* Physical destination channels must be assigned to these logical destination channels on the MFR-3100EX.

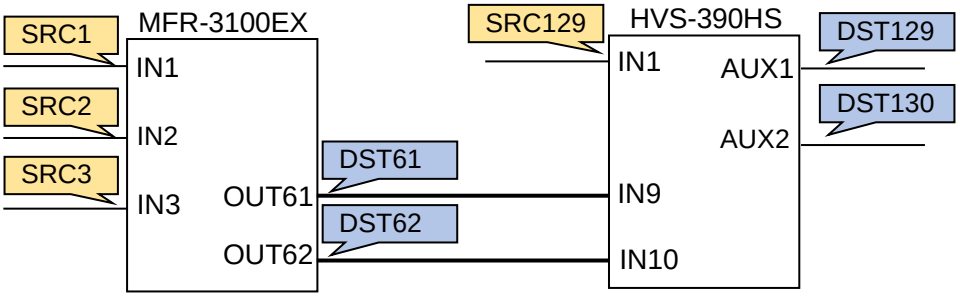

5) Assign logical source and destination channels on the MFR-3100EX to input channels and AUX buses on the switcher.

<AUX bus assignments>

a) Open the **Destination Assignment** page.
b) Select **HVS(AUX)** of [Unit: HVS-390HS] under **Select Table**.
c) Set **Level** to **1**.
d) Assign **AUX1** to **DST 129**.
e) Assign **AUX2** to **DST 130**.

<Input channel assignments>

a) Open the **Source Assignment** page.
b) Select **HVS(AUX)** of [Unit: HVS-390HS] under **Select Table**.
c) Set **Level** to **1**.
d) Assign **IN1** to **SRC 129**.

After above setup settings are complete:

- If **SRC 129** is selected for **DST 129** on the MFR-3100EX, **IN1** is selected for **AUX1** on the switcher.
- If **SRC 3** is selected for **DST 129** on the MFR-3100EX, **IN9** is selected for **AUX1** on the switcher and **SRC 3** is also selected for **DST 61** on the MFR-3100EX.
- If **IN9** is selected for **AUX1** on the switcher, **a source assigned to DST 61** is selected for **DST 129** on the MFR-3100EX
- If **IN10** is selected for **AUX2** on the switcher, **a source assigned to DST 62** is selected for **DST 130** on the MFR-3100EX

* Note that destination channels to which physical channels are assigned (DST 61 and DST 62 in the example above) on the MFR-3100EX cannot select source channels to which the switcher input channels are assigned (SRC 129 in the example above).

* If an AUX crosspoint is switched on the switcher by the Synchronous Crosspoints switching and it is not listed in Re-Entry page, the AUX crosspoint returns to the previous state.

4. Multiview Output

The MFR-16MV card allows you to provide multiview images from any of 16 outputs. Multiview images can display up to 16 video windows and two clocks, which can be placed on a single MV channel or on two MV channels by dividing MV windows and clocks.

◆ **Process Block Diagram**

Any destination channels can be assigned to video windows of MV channel(s) and any source channels can be selected through destination channels. Therefore, multiview images can display any router source channels. In addition, MFR-16MV allows you to display individual destination channel images as well as multiview images. (The figure below shows an example when an MFR-16MV is installed in Slot 9.)

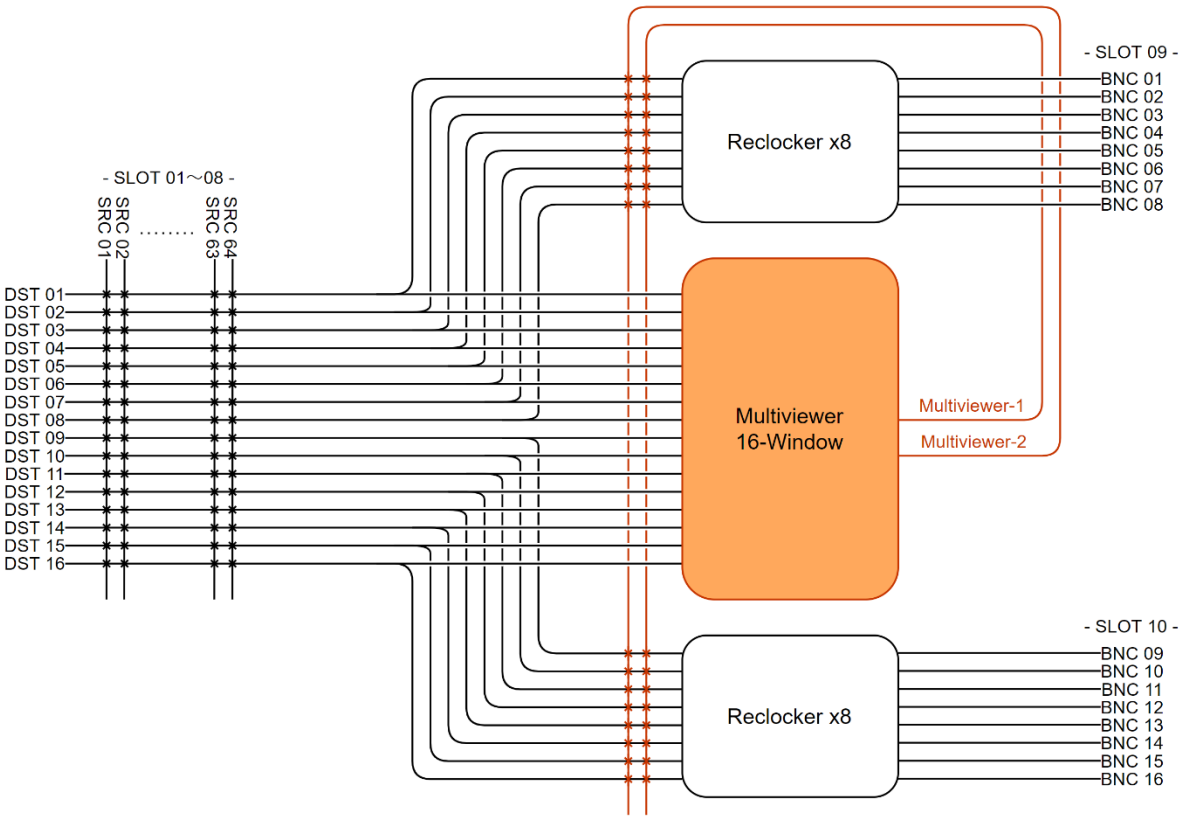

4-1. Multiviewer Specifications

Item	Specifications	
Video format	3Gbps (Level-A)	1080/60p, 59.94p, 50p
	1.5Gbps (HD)	1080/60i, 59.94i, 50i, 720/60p, 59.94p, 50p, 1080/30p, 29.97p, 25p, 24p, 23.98p, 1080/30PsF, 29.97PsF, 25PsF, 24PsF, 23.98PsF
Video output	SDI 75-ohm BNC x 16 Selectable from MV OUT1, MV OUT2 or DST channel	
Audio output (Except MV outputs)	Embedded (SDI) - Group x 4, 8 stereo pairs - Sampling frequency: 48kHz - Bit depth: 24bit	
Input/output delay	1 frame (with synchronous inputs)	
MV objects	16 video windows (selectable from all destination channels) 2 clocks (selectable from 10 types)	

Item	Specifications
Window size	1/16, 1/9 or 1/4
Other MV objects	- Background (Input image, Matte or BLACK) - Text (8 characters x 2) - Window frame (normal or tally) - Tally marker - Audio level meter (8 channels) - Timecode - Video loss
Savable MV layouts	16 (16 per each MFR-3100EX unit)
Layout Manager	Screen and window layout creation and editing in Web-based Control * Window and text locations are arbitrary.
Clock time	- Source: Internal clock source - SNTP adjustment available - Power source: Built-in lithium battery
Loop playback	Sequence display of input sources (up to 64 inputs) on a multiview screen
Adjustable timing	-0.5H to +1.5H

* When using asynchronous input signals, select **ON** in FS Mode. Some functions are disabled when **ON** is selected. See next section for details.

4-2. FS Mode

When using asynchronous input signals, select **ON** in the [Web-based Control: **MV Settings** > **FS Mode**]. Setting FS Mode to **ON** disables or limits the following functions.

Item	FS Mode: **ON**	FS Mode: **OFF** (Default)
Time Code	Not displayed	Displayed
Background	Matte, BLACK	EXTERNAL, Matte, BLACK
In-Out Delay	1-2 frames	1 frame
Adjustment range	1 frame	2H adjustable (-0.5H to +1.5H)
Multiviewer	1	2

4-3. Displaying Multiview Images

At first, select destination channels used for multiview images in the Web-based Control.

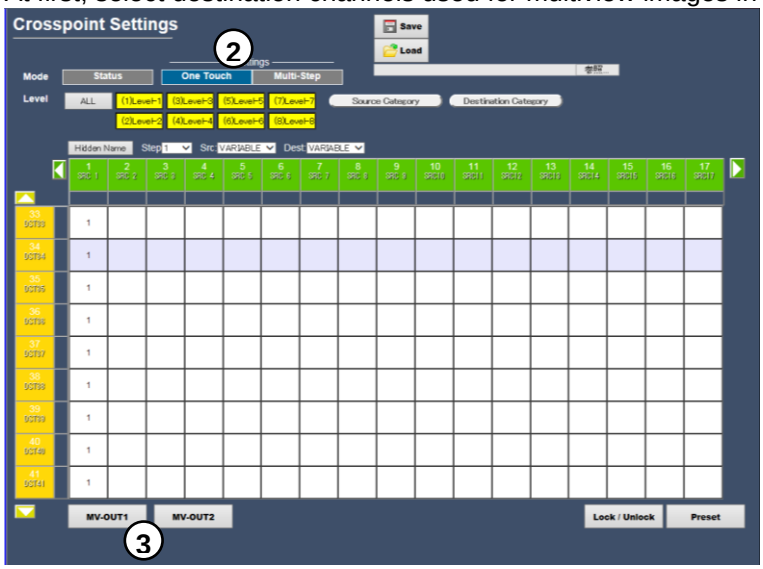

(1) Open the [Web-based Control: **Crosspoint Status** page].
(2) Press **One Touch**.
(3) Select Destination channels for a multiview image and press **MV-OUT1** or **MV- OUT2**.

4-4. Basic Rules for Creating Multiview Layouts

- Three types of windows, **1/16**, **1/9** and **1/4**, are available.

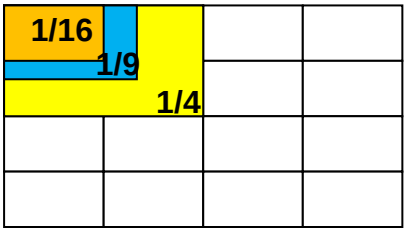

- Although windows are shared between MV-OUT1 and MV-OUT2, window duplications are not allowed. For example, if Window 1 is displayed on MV-OUT1, MV-OUT2 cannot display Window1.
- Windows can be placed at any location, but the following objects must be separated, not overlapped. (Otherwise, images will appear distorted.)
  (a) Windows.
  (b) Clock and window
  (c) Window and clock titles
  (d) Clocks
  (e) Window and other window title
- Background images can be selected from 16 window sources and matte and black images. (Selectable images are different depending on the FS Mode setting. See Sec. 4-2.)

* MV-OUT1 and MV-OUT2 can use different background images, but the same color if both use Matte. For 1080/60p, 59.94p and 50p signals, the background images for MV-OUT1 and MV-OUT2 are the same.)

4-5. Clocks

The following 10 clock types are available.

Analog clock 1	Analog clock 2	Analog clock 3	Analog clock 4
Round - Time 	Square - Time 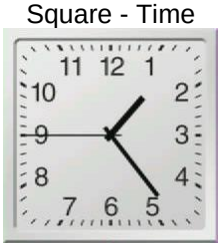	Square (light) - Date/Time 	Square (dark) – Date/Time 
Analog clock 5	**Analog clock 6**		
Round (light) – Date/Time 	Round (dark) – Date/Time 		
Digital clock 1	**Digital clock 2**	**Digital clock 3**	**Digital clock 4**
Time (dark) 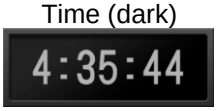	Time (light) 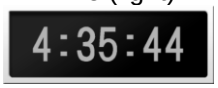	Date/Time (light) 	Date/Time (dark) 

4-6. Available Window Objects

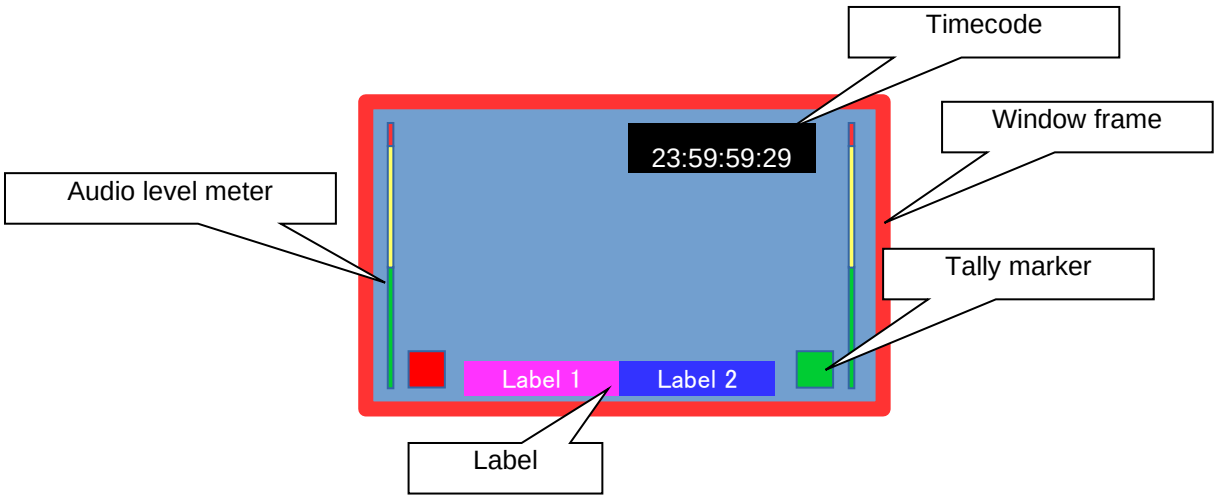

Label	Label 1 and Label 2 can display simultaneously. Label 1 and Label 2 are concatenated. Size: Select from 3 sizes. Label text: Select from **Title**, **Alarm** and **Title+Alarm**. **Title**: Displays channel names or text specified by DP-ID. Text and background colors are selectable. Label 1 is assigned to Title1 and Label 2 to Title2. **Alarm**: Displays text only when an alarm occurs. **Title + Alarm**: Displays alarms. Titles are displayed when no alarm has been occurred. Labels can be placed within the red rectangle in the figure below. 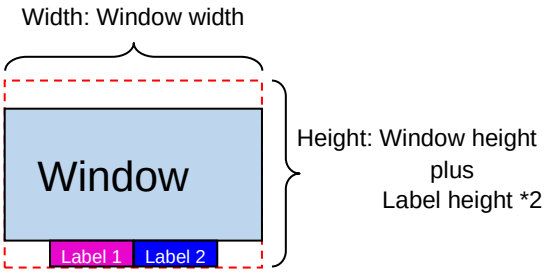
Frame	Width: Select from 4 types. Color: Select from 8 colors. Also available as tally frame (in accordance with DP-ID information assigned to labels)
Tally marker	Can be placed freely anywhere within windows. Tally information is displayed according to DP-ID information assigned to labels.
Audio level meter	Layout: Select from the following 4 types (①-③ in 4K mode) 
Timecode	Timecode is not displayed when FS Mode is set to **ON**. See Sec. 4-2.) Size: Select from 3 types. Location: Same area as that of labels Text and background colors selectable

5. Gearbox Feature (MFR-8SDIGB/8SDOGB)

Optional **MFR-8SDIGB/8SDOGB** cards support Gearbox features, in which video signal conversions between 12G-SDI and Quad Link 3G-SDI, and between 2SI and SQD are available.

◆ **Gearbox features**

- Conversion between 12G-SDI and Quad Link 3G-SDI (including asynchronous input)
- Conversion between 2SI and SQD
- Clean switch after conversion by AVDL (Automatic Variable Delay Line)
  Also allows Gearbox I/O delay selection (excluding 2SI / SQD conversions)
- REF IN or SDI Input synchronization
- H/V ANC data pass-through

5-1. MFR-8SDIGB / 8SDOGB Cards

MFR-8SDIGB / 8SDOGB cards have two built-in Gearboxes that can respectively perform signal conversions. The gearboxes can output signals without conversion and test patterns.
Only 1D and 2D connectors can support 12G-SDI signals. If a 12G-SDI signal is input to a Gearbox, A, B and C connectors are disabled.

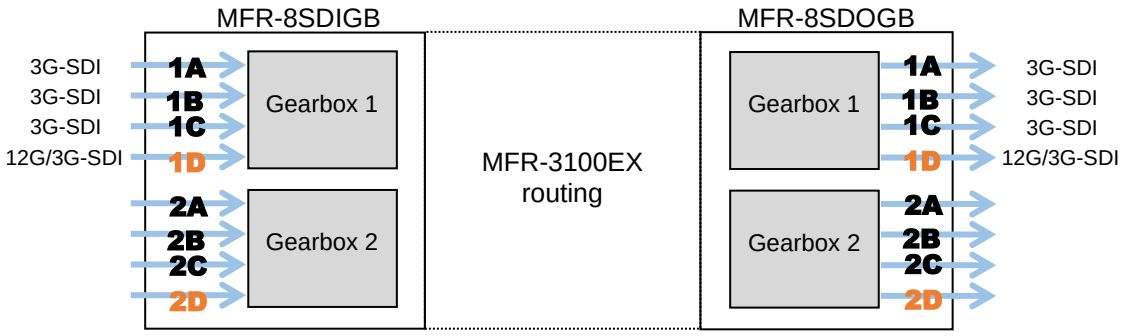

◆ **Supported formats**

Signal format		Video format		Standard
12G-SDI		3840 x 2160/59.94p 3840 x 2160/50p	4:2:2 10-bit	SMPTE ST2082-10
Quad Link 3G-SDI (Level-A)	SQD (Square Division) 2SI (2-Sample Interleave)	3840 x 2160/59.94p 3840 x 2160/50p	4:2:2 10-bit	SMPTE ST425-5

5-2. Available Conversions

◆ **MFR-8SDIGB cards allow following input conversion settings:**

From	To	Genlock	Delay(H)(*3)	Total Delay (*4)	Ancillary Data
12G-SDI	3G Quad (2SI)	SDI Input (*1)	0.3H to 1H	0 frame + ** (H)	Through Mask
		REF IN	0.3H to 1H	0 frame + ** (H) 1 frame + Delay (H)	
			0.5H to 1H	1 frame + 0H	
12G-SDI	3G Quad (SQD)	SDI Input (*1)(*2) REF IN	0.3H to 1H	1 frame + Delay (H)	
3G Quad (2SI)	3G Quad (SQD)				
3G Quad (SQD)	3G Quad (2SI)		0.5H to 1H	1 frame + 0H	

◆ **MFR-8SDOGB cards allow following output conversion settings:**

From	To	Genlock	Delay(H)(*3)	Total Delay (*4)	Ancillary Data
3G Quad (2SI)	12G-SDI	SDI Input (*1)	0.3H to 1H	0 frame + ** (H)	Through Mask
		REF IN	0.3H to 1H	0 frame + ** (H) 1 frame + Delay (H)	
			0.5H to 1H	1 frame + 0H	
3G Quad (SQD)	12G-SDI	SDI Input (*1)(*2) REF IN	0.3H to 1H	1 frame + Delay (H)	
3G Quad (2SI)	3G Quad (SQD)				
3G Quad (SQD)	3G Quad (2SI)		0.5H to 1H	1 frame + 0H	

(*1) SDI signal input to the D connector is used as reference. When SDI Input Lock is selected on MFR-8SDOGB cards, video signals are synchronized by inputting signals to all four channels in gearboxes.

(*2) Available only on Gearboxes 2.

(*3) **Delay (H)** and **Total Delay (H)** indicate amount of delay and their settings correspond to the following adjustable ranges.

Delay (H) Setting	Adjustable range	Delay (H) Setting	Adjustable range
0.3H	-0.8H to +0.2H	0.8H	-0.3H to +0.7H
0.4H	-0.7H to +0.3H	0.9H	-0.2H to +0.8H
0.5H	-0.6H to +0.4H	1H (1)	-0.5H to +0.5H
0.6H	-0.5H to +0.5H	1H (2)	-0.1H to +0.9H
0.7H	-0.4H to +0.6H		

(*4) If **Total Delay (frame)** is set to "**0 frame**" for both gearboxes, the **different Total Delay (H)** setting is available for the gearboxes.
If **Total Delay (frame)** is set to "**1 frame**" for either one or both gearboxes, the **same Total Delay (H)** setting is required for the gearboxes: **1 frame + 0H** or **1frame + Delay (H).**

5-3. Conversion Settings

In the Web GUI, specify the Gearbox input and output formats, and then assign input/output physical channels to logical channels. Use Link Settings that allow simultaneous 4-channel operation and facilitate crosspoint switches.

5-3-1. Converting 3G SQD Input to 2SI (MFR-8SDIGB)

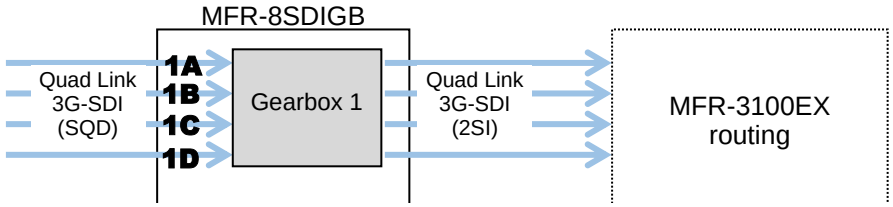

1) Open the **Gearbox Settings** page in the Web GUI and select signal formats under **From** and **To** as shown below for a Gearbox in the MFR-8SDIGB card block. (This example sets Gearbox 1 on the Slot 1 card.)

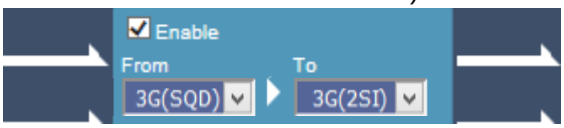

2) Open the **Source Assignment** page in the Web GUI and assign the physical channels (**SDI 1-4**) to logical channels (**SRC 1-4**).

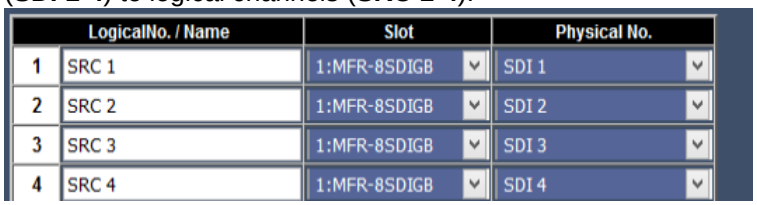

	LogicalNo. / Name	Slot	Physical No.
1	SRC 1	1:MFR-8SDIGB	SDI 1
2	SRC 2	1:MFR-8SDIGB	SDI 2
3	SRC 3	1:MFR-8SDIGB	SDI 3
4	SRC 4	1:MFR-8SDIGB	SDI 4

3) Use a remote control unit or the Crosspoint page in the Web GUI to assign output channels to **SRC 1-4**.

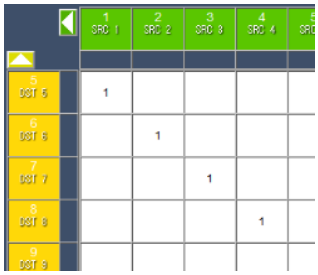

5-3-2. Converting 2SI to SQD Output (MFR-8SDOGB)

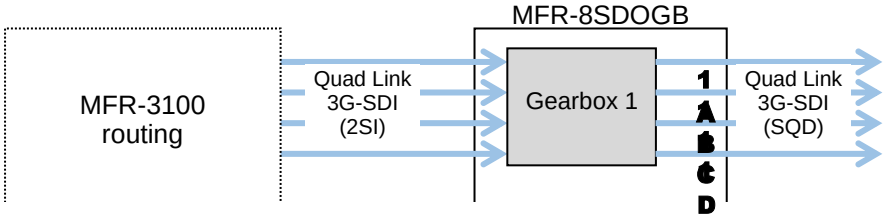

1) Open the **Gearbox Settings** page in the Web GUI and select signal formats under **From** and **To** as shown below for a Gearbox in the MFR-8SDOGB card block. (This example sets Gearbox 1 on the Slot 9 card.)

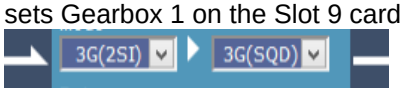

2) Open the **Destination Assignment** page in the Web GUI and assign the physical channels (**SDI 1-4**) to logical channels (**DST 1-4**).

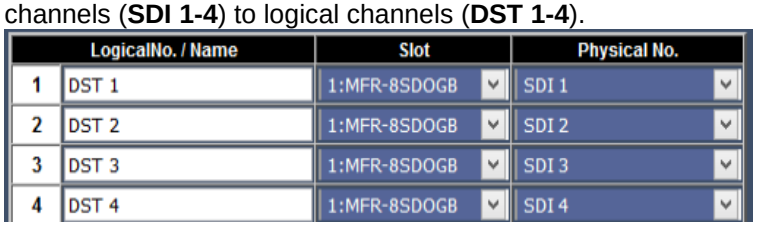

	LogicalNo. / Name	Slot	Physical No.
1	DST 1	1:MFR-8SDOGB	SDI 1
2	DST 2	1:MFR-8SDOGB	SDI 2
3	DST 3	1:MFR-8SDOGB	SDI 3
4	DST 4	1:MFR-8SDOGB	SDI 4

3) Use a remote control unit or the Crosspoint page in the Web GUI to assign input channels to **DST 1-4**.

5-3-3. Converting 12G-SDI Input to 3G-SDI 2SI (MFR-8SDIGB)

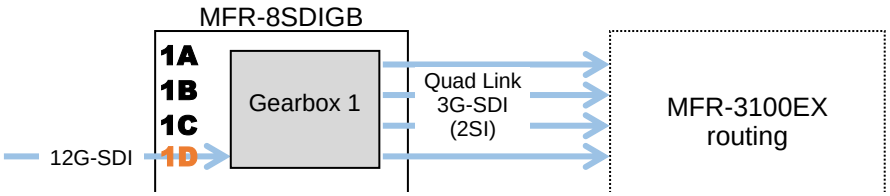

1) Open the **Gearbox Settings** page in the Web GUI and select signal formats under **From** and **To** as shown below for a Gearbox in the MFR-8SDIGB card block. (This example sets Gearbox 1 on the Slot 1 card.)

2) Open the **Source Assignment** page in the Web GUI and assign the physical channels (**SDI 4 Link A to D**) to logical channels (**SRC 1-4**).

	LogicalNo. / Name	Slot	Physical No.
1	SRC 1	1:MFR-8SDIGB	SDI 4 Link A
2	SRC 2	1:MFR-8SDIGB	SDI 4 Link B
3	SRC 3	1:MFR-8SDIGB	SDI 4 Link C
4	SRC 4	1:MFR-8SDIGB	SDI 4 Link D

* Four channel assignments are required for 12G-SDI signals in the same manner as for Quad-Link 3G-SDI signals.

3) Use a remote control unit or the Crosspoint page in the Web GUI to perform the crosspoint switches.

5-3-4. Converting 3G-SDI SQD to 12G-SDI Output (MFR-8SDOGB)

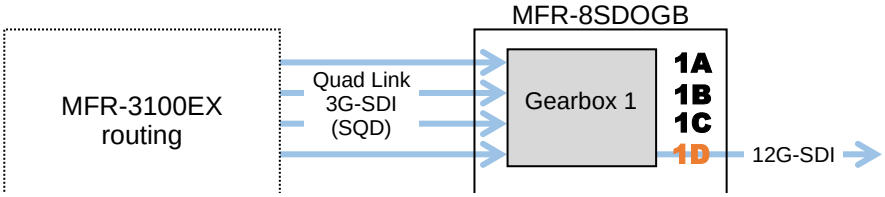

1) Open the **Gearbox Settings** page in the Web GUI and select signal formats under **From** and **To** as shown below for a Gearbox in the MFR-8SDOGB card block. (This example sets Gearbox 1 on the Slot 9 card.)

2) Open the **Destination Assignment** page in the Web GUI and assign the physical channels (**SDI 4 Link A to D**) to logical channels (**DST 1-4**).

	LogicalNo. / Name	Slot	Physical No.
1	DST 1	1:MFR-8SDOGB	SDI4 Link A
2	DST 2	1:MFR-8SDOGB	SDI4 Link B
3	DST 3	1:MFR-8SDOGB	SDI4 Link C
4	DST 4	1:MFR-8SDOGB	SDI4 Link D

* Four channel assignments are required for 12G-SDI signals in the same manner as for Quad-Link 3G-SDI signals.

3) Use a remote control unit or the Crosspoint page in the Web GUI to perform the crosspoint switches.

5-3-5. Payload ID

◆ **Adding Payload ID information to Output Signals.**

Select Payload ID information source for output signals.

Insert: Data created for output signals.

Through: Data embedded to input signals.

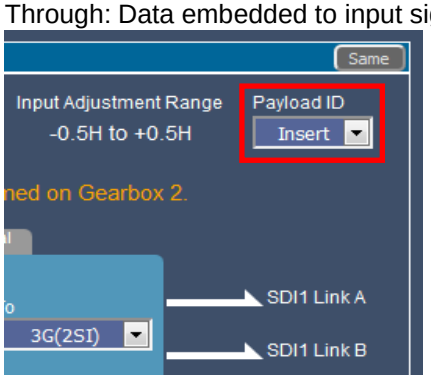

◆ **Adding 8K Quad-Link Payload ID Information.**

When converting 3G Quad-Link to 12G-SDI, Payload ID information for 8K Quad-Link (In compliance with SMPTE 2082-12) is able to be added to 12G-SDI output. Set as shown below.

From	To	Payload ID	Payload ID Information to Be Added
3G Quad-Link (2SI or SQD)	12G(8K Link1)	Insert	8K Quad-Link, Link1
	12G(8K Link2)	Insert	8K Quad-Link, Link2
	12G(8K Link3)	Insert	8K Quad-Link, Link3
	12G(8K Link4)	Insert	8K Quad-Link, Link4

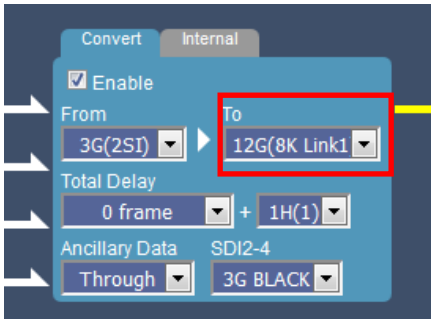

When adding 8K Quad-Link Payload ID information to Gearbox 1, make sure to also add the information to Gearbox 2 as shown below. Use different Link Numbers.

Ex.)

Gearbox	From	To (Yes)	To (No)
GB1	3G(SQD)	12G(8K Link1)	12G
GB2	3G(2SI)	12G(8K Link2)	12G(8K Link2)

5-3-6. 3G-SDI BNC Output Settings

When converting 3G Quad-Link to 12G-SDI, 3G-SDI Black or 3G-SDI Link 1 are selectable for remaining 3 SDI output signals.

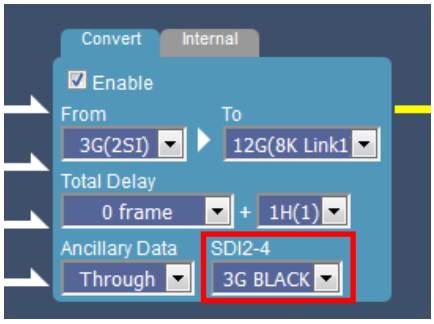

6. AVDL Function (MFR-8SDODL)

Optional **MFR-8SDODL** cards allows you to use AVDL (Auto Video Delay Line) function.
In addition to expansion of phase adjustment range, Quiet Switch enables clean signal switching and V-Fade allows you to reduce audio switching noise using Fade Out/In.

IMPORTANT

- REF input and SDI input signal phases must be synchronized.
- If phase adjustment fails, the video is delayed by one horizontal line.
- When Quiet Switch is set to ON, only limited ancillary data, payload ID information and audio data, is inserted.

AVDL settings should be set in the Web-based Control **AVDL Settings** page.
See the Web-based Control manual for more details.

6-1. Output Format

Set the video format for each MFR-8SDODL card.
Supported formats are as shown below.

1080p, 1080i, 720p / 60, 59.94, 50
1080p, 1080PsF / 30, 29.97, 23.98, 25, 24

Set the same video format as the MFR-3100EX system format.
See Sec. 6-4. “MFR-8SDODL Support Formats.”

6-2. Quiet Switch

Set Quiet Switch to ON/OFF for each MFR-8SDODL card.
Quiet Switch ON/OFF determines the ancillary data types that can be passed through in the AVDL system.

◆ **If Quiet Switch is set to OFF**

All ancillary data in SDI input signals are passed through “as is” to outputs regardless of the data packet type.
Note that, however, erroneous data may be embedded into outputs when switching signals or connecting / disconnecting BNC cables (SDI input). If the phase difference exceeds the AVDL adjustment range, the ancillary data insertion line is also shifted by the same amount as the video.

◆ **If Quiet Switch is set to ON**

Only the following packetized ancillary data is passed through to outputs.

- Payload ID information compliant to SMPTE ST352
- Embedded audio compliant to SMPTE ST299-1

Ancillary data packet continuity and insertion line are guaranteed even if signal switching or BNC cable connection / disconnection (SDI input) occurs.

V-Fade becomes available.

V-Fade OFF	Audio packet continuity is maintained, but signal switching may distort the sound.
V-Fade ON	Audio distortion is reduced by using fade out/in during signal switching.

6-3. Output Delay

Specify the delay amount for SDI outputs on the MFR-8SDODL card.
The Delay setting determines the adjustment range of SDI input. Set the delay amount for each output.

Delay setting	Adjustment range
1H	-4.1H to +0.9H
2H	-3.1H to +1.9H
3H	-2.1H to +2.9H
4H	-1.1H to +3.9H
5H	-0.1H to +4.9H

6-4. MFR-8SDODL Support Formats

MFR-3100EX FORMAT	BB/ TRI in	AVDL FORMAT																		
		1080																720		
		60p	59.94p	50p	60i	59.94i	50i	30PsF	29.97PsF	25PsF	23.98PsF	24PsF	30p	29.97p	25p	23.98p	24p	60p	59.94p	50p
1080/60p	TRI	✓	-	-	-	-	-	-	-	-	-	-	-	-	-	-	-	-	-	-
1080/59.94p	BB	-	✓	-	-	-	-	-	-	-	-	-	-	-	-	-	-	-	-	-
	TRI	-	✓	-	-	-	-	-	-	-	-	-	-	-	-	-	-	-	-	-
1080/50p	BB	-	-	✓	-	-	-	-	-	-	-	-	-	-	-	-	-	-	-	-
	TRI	-	-	✓	-	-	-	-	-	-	-	-	-	-	-	-	-	-	-	-
1080/60i	TRI	-	-	-	✓	-	-	-	-	-	-	-	-	-	-	-	-	-	-	-
1080/59.94i	BB	-	-	-	-	✓	-	-	-	-	-	-	-	-	-	-	-	-	-	-
	TRI	-	-	-	-	✓	-	-	-	-	-	-	-	-	-	-	-	-	-	-
1080/50i	BB	-	-	-	-	-	✓	-	-	-	-	-	-	-	-	-	-	-	-	-
	TRI	-	-	-	-	-	✓	-	-	-	-	-	-	-	-	-	-	-	-	-
1080/30PsF	TRI	-	-	-	-	-	-	✓	-	-	-	-	-	-	-	-	-	-	-	-
1080/29.97PsF	BB	-	-	-	-	-	-	-	✓	-	-	-	-	-	-	-	-	-	-	-
	TRI	-	-	-	-	-	-	-	✓	-	-	-	-	-	-	-	-	-	-	-
1080/25PsF	BB	-	-	-	-	-	-	-	-	✓	-	-	-	-	-	-	-	-	-	-
	TRI	-	-	-	-	-	-	-	-	✓	-	-	-	-	-	-	-	-	-	-
1080/23.98PsF	TRI	-	-	-	-	-	-	-	-	-	✓	-	-	-	-	-	-	-	-	-
1080/24PsF	TRI	-	-	-	-	-	-	-	-	-	-	✓	-	-	-	-	-	-	-	-
1080/30p	TRI	-	-	-	-	-	-	-	-	-	-	-	✓	-	-	-	-	-	-	-
1080/29.97p	BB	-	-	-	-	-	-	-	-	-	-	-	-	✓	-	-	-	-	-	-
	TRI	-	-	-	-	-	-	-	-	-	-	-	-	✓	-	-	-	-	-	-
1080/25p	BB	-	-	-	-	-	-	-	-	-	-	-	-	-	✓	-	-	-	-	-
	TRI	-	-	-	-	-	-	-	-	-	-	-	-	-	✓	-	-	-	-	-
1080/23.98p	TRI	-	-	-	-	-	-	-	-	-	-	-	-	-	-	✓	-	-	-	-
1080/24p	TRI	-	-	-	-	-	-	-	-	-	-	-	-	-	-	-	✓	-	-	-
720/60p	TRI	-	-	-	-	-	-	-	-	-	-	-	-	-	-	-	-	✓	-	-
720/59.94p	BB	-	-	-	-	-	-	-	-	-	-	-	-	-	-	-	-	-	✓	-
	TRI	-	-	-	-	-	-	-	-	-	-	-	-	-	-	-	-	-	✓	-
720/50p	BB	-	-	-	-	-	-	-	-	-	-	-	-	-	-	-	-	-	-	✓
	TRI	-	-	-	-	-	-	-	-	-	-	-	-	-	-	-	-	-	-	✓
525/59.94i	BB	-	-	-	-	-	-	-	-	-	-	-	-	-	-	-	-	-	-	-
625/50i	BB	-	-	-	-	-	-	-	-	-	-	-	-	-	-	-	-	-	-	-

✓ : Available - : Unavailable

7. Serial / LAN Command Control

Up to 20 external devices can be connected to an MFR Main Unit (including MFR-GPI serial ports) through LAN or serial interface.

7-1. Serial Interface

Crosspoint switchover and tally output can be controlled via the SERIAL port 1-4 on the MFR GPI.

7-2. LAN Interface

The MFR Series main unit is able to connect to a third-party automatic control system via the RJ-45 port (PC-LAN port). The TCP/IP communication protocol is supported. The control PC will be the Client, and the MFR Series main unit will be the Server.

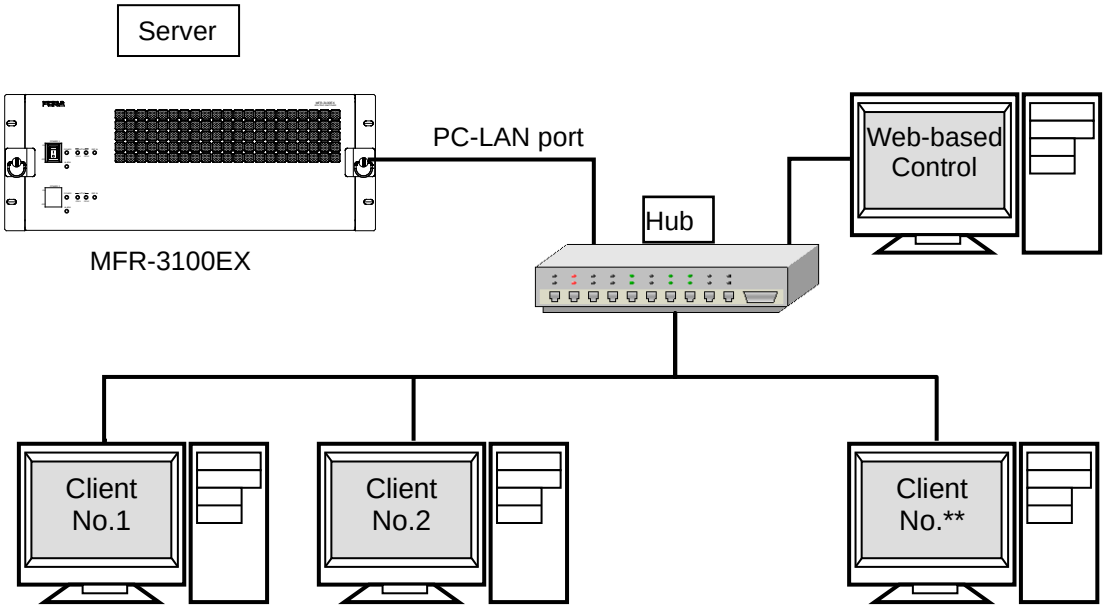

◆ **Basic specifications**

Item	Description
IP address (PC-LAN port)	Primary side (PC-LAN CPU1) Default = 192.168.0.13 Secondary side (PC-LAN CPU2) Default = 192.168.0.12 * (Subnet Mask = 255.255.255.0)
Port number	Setting range: 49152 to 65534 (Default: 23)
Number of PCs	Max. 16
Response / Resending	Wait before sending next command (Resend if the Echo is not returned.)
Login password	None
Communication protocol	TCP/IP, Control PC: Client, MFR-3100EX: Server The protocol below uses ASCII code.
Command protocol	Crosspoint remote control and Audio remote settings protocols (in ASCII code)

* In a redundant CPU configuration, the Client should be connected to both the primary side (PC-LAN CPU1) and the secondary side (PC-LAN CPU2) and send control commands to both. Normally, the secondary side can only be connected and does not respond to commands, but if an error occurs and the CPU switches to the secondary side, the secondary side will accept control and respond.

7-3. Control Command

The control command list below shows the standard control commands for **Crosspoint remote control**, **Crosspoint remote control 2** and **Audio remote settings**, which are available for both LAN and serial interfaces.

◆ Control command list

Function		Serial	LAN *1	Protocol *2
1	Commands (S?) for requesting the crosspoints list	Yes	Yes	Crosspoint remote control / Crosspoint remote control 2
2	Commands (X?) for requesting information on crosspoints (by specifying a destination and level.)	Yes	Yes	
3	Commands (X:) for switching over a crosspoint (single channel)	Yes	Yes	
4	Commands for switching over crosspoints (multi-channel simultaneous switchover)	Yes	Yes	
5	Commands (W:) for locking a destination	Yes	Yes	
6	Commands (Z:) for reinitializing a unit	Yes	Yes	
7	Commands (K?) for requesting input/output channel names	-	Yes	Crosspoint remote control 2
8	Commands (A?) for requesting CPU status.	-	Yes	
9	Commands (W?) for requesting Destination Lock status.	-	Yes	
10	Commands (K:) for importing signal names	-	Yes	
11	Commands (F?) for requesting System Size	Yes	Yes	Crosspoint remote control / Crosspoint remote control 2
12	Commands for setting video format (reference and/or switching point).	-	Yes	Crosspoint remote control 2
13	Commands for setting audio input channels	-	Yes	Audio remote settings
14	Commands for mapping audio channels	-	Yes	
15	Commands for setting link function (enable/disable)	-	Yes	
16	Commands for setting video format and delay	-	Yes	

*1 When commands are sent via LAN, an Echo, Prompt, S response and other response messages may be included in a single packet or divided into two or more packets. Therefore, do not process commands in a per packet basis but a per stream basis.

*2 A command protocol should be selected in the [Web-based Control: **Port Settings** page].

◆ Command formats

Func.	Control command	Command response	Ref.
1	@[sp]S?<Lvl>	S:<Lvl><Dest>,<Src>	-
2	@[sp]X?<Lvl><Dest>	S:<Lvl><Dest>,<Src>	-
3	@[sp]X:<Lvls>/<Dest>,<Src>	S:<Lvl><Dest>,<Src> C:<Lvls>/<Dest>,<Src>[…..[S<Salvo number>][L<Link number>]]:I<ID>	-
4	**Clear a preset crosspoint.** @[sp]B:C		-
	Preset a crosspoint. @[sp]P:<Lvl>/<Dest>,<Src>		
	Read a preset crosspoint specifying a level and destination. @[sp]P?<Lvl><Dest>	V:<Lvl><Dest>,<Src>	
	Read preset crosspoints for all channels in the specified level. @[sp]V?<Lvl>	V:<Lvl><Dest>,<Src>	
	Set the preset crosspoints simultaneously. @[sp]B:E	S:<Lvl><Dest>,<Src> C:<Lvls>/<Dest>,<Src>[…..[S<Salvo number>][L<Link number>]]:I<ID>	-

Func.	Control command	Command response	Ref.
5	**LOCK ALL units.** @[sp]W:<Lvl>/<Dest>,<ID>,1	W!<Lvl><Dest>,<ID>,1	-
	LOCK OTHER units. @[sp]W:<Lvl>/<Dest>,<ID>,2	W!<Lvl><Dest>,<ID>,2	-
	Disable LOCK. @[sp]W:<Lvl>/<Dest>,<ID>,0	W!<Lvl><Dest>,<ID>,0	-
6	@[sp]Z:<Lvls>	S:<Lvl><Dest>,<Src> C:<Lvls>/<Dest>,<Src>[…..[S<Number of crosspoints in Salvo>][L<Number of Links>]]:I<ID>	-
7	@[sp]K?<SorD><AorK>,<Ofset>	K:<SorD><AorK><No.>,<Dat>	7-3-3
8	@[sp]A? — If CPU is active:	A:<ID>	7-3-4
	@[sp]A? — If CPU is passive:	(No response)	
9	@[sp]W?<Lvl>,<Dest>	W!<Lvl><Dest>,<ID>,0-2	7-3-5
10	K:<S or D><S or L or A><No.>,<Dat>		7-3-6
11	@[sp]F?<Lvl>	F:<Lvl><Dst Size>,<Src Size>/< Dst Size >,<Src Size>	7-3-7
12	**Preset video format, reference and switching point.** @[sp]UF:<YY>/<R#>,<S$>	UF!<YY>/<R#>,<S$>	7-3-8
	Set preset settings. @[sp]UE:A	UR!W UR!<YY>/<R#>,<S$>	
		UR!E(Error response)	
	Cancel preset settings. @[sp]UE:C	UR!C	
13	@[sp]AA:<SlotNo.><Grp>/<I-No>,<L-Lvl><L-Src><T#>	AA:<SlotNo.><Grp>/<I-No>,<L-Lvl><L-Src><T#>	7-3-9
14	@[sp]AX:<SlotNo.><Grp>/<O-BNC><O-CH>,<I-No.><I-CH>	AC:<SlotNo.><Grp>/<O-BNC><O-CH>,<I-No.><I-CH>:I<ID>	7-3-10
15	@[sp]AL:<ONorOFF>	AL:<ONorOFF>	7-3-11
16	**Preset video format and delay.** @[sp]AF:<SlotNo.><Grp>/<FORMAT>,<D#>	AF!<SlotNo.><Grp>/<FORMAT>,<D#>	7-3-12
	Set preset settings. @[sp]AE:A	AR!W AR!<SlotNo.><Grp>/<FORMAT>,<D#>	
		AR!N (Error response)	
	Cancel preset settings. @[sp]AE:R	AR!R	

* [sp] indicates a space.
* Commands must end with a carriage return (ASCII code 0x**0D**) only or carriage return and line feed (ASCII code 0x**0A**). MFR units add **a carriage return** and **line feed** in front of and at the end of reply messages.

Command parameters and setting range

<Lvl>	0 - 7	Allows you to specify the level to switch crosspoints. * When in single-level operation.
<Lvls>	0 - 7	Allows you to specify the levels to switch crosspoints. * When in multiple-level operation
<Dest>	000 - 1FF	Allows you to specify the crosspoint switchover destination.
<Src>	000 - 3FF	Allows you to specify the source of crosspoint switchover.
<ID>	0 - FE	Unit ID. The ID must be different from that of other devices in the same network. Use **1** to **FE** for ID numbers. The host returns **0** when the lock is released.

* All command values are in hexadecimal, starting from 0 (zero).
  (For example, Source "**16**" is represented as <Src>"**F**.")
* If levels are not in use, set <Lvl> or <Lvls> to "0"(zero).

7-3-1. Command Responses (Commands 1-6)

- **Echo and Prompt**

  Responses will be sent as shown below when receiving commands:

A command is received. ↓ Echo ↓ Prompt	 @[sp]X:<Lvls>/<Dest>,<Src>[CR] [CR][LF]>

* MFR units respond with an Echo Reply with the same data that they received. Therefore, echo reply messages end with [CR][LF] or [CR] only. If echo messages with [CR][LF] are received, only [LF] composes the second line.

* MFR units read a command, ended with a newline, and return a prompt to notify that they are ready to receive a new command.

* A carriage return and line feed are not added at the end of "Echo Reply" and "Prompt"

* Echo ON/OFF can be set in [Web-Based Control: **Port Settings** page.

- **"C" responses**

  A "C" response is sent as shown below when a control command is received:

[CR][LF]C:<Lvls>/<Dest>,<Src>[…[S<**Salvo number**>][L<**Link number**>]]:I<ID>[CR][LF]

* C responses are sent to all the terminals in the system.

* C response ON/OFF can be set in [Web-based Control: **Port Settings** page].

Parameter	Setting range	Description
<Salvo number >	1−FFF	The number of crosspoints that are to be changed simultaneously by Salvo settings. A response if 3 crosspoints are to be changed simultaneously: **C:0/0,0...S2:IA**
<Link number>	1−FFF	The number of crosspoints that are to be changed simultaneously by Link settings. A response if 2 crosspoints are to be changed simultaneously: **C:0/0,2...L1:IA**

- **"S" responses**

  An "S" response is sent as shown below when crosspoints are switched by a command.

[CR][LF]S:<Lvl><Dest>,<Src>[CR][LF]

* If a crosspoint is switched by an X or B command, its "S" response is sent to all the terminals in the system. However, if any crosspoints are not switched (specifying the same crosspoint as the current one), its "S" response is sent only to the terminal that sent the command.

* C responses are sent before S responses in some cases.

* A command is received from another terminal while a B or X command is processed, MFR units send "S" response messages to the terminals, notifying only the latest crosspoint states.

* A crosspoint switch command is not performed if the relevant crosspoint is locked or inhibited to change.

* S response ON/OFF can be set in [Web-based Control: **Port Settings** page].

Ex. 1) When Source 5 is selected for Destination 3 in Level 1: (Function ③)

(A)	@ X:0/2,4[CR] [CR][LF]>
(B)	[CR][LF] C:0/2,4:IA[CR][LF]
(C)	[CR][LF] S:02,4[CR][LF]

Terminal display:

```
@ X:0/2,4
>
C:0/2,4:IA

S:02,4
```

Ex. 2) When Source 113 is selected for Destination 49 in Levels 2 to 7: (Function ③)

(A)	@ X:123456/30,70[CR] [CR][LF]>
(B)	[CR][LF] C:123456/30,70...S5:IA[CR][LF]
(C)	[CR][LF] S:130,70[CR][LF]
(C)	[CR][LF] S:230,70[CR][LF]
(C)	[CR][LF] S:330,70[CR][LF]
(C)	[CR][LF] S:430,70[CR][LF]
(C)	[CR][LF] S:530,70[CR][LF]
(C)	[CR][LF] S:630,70[CR][LF]

Terminal display:

```
@ X:123456/30,70
>
C:123456/30,70…S5:IA

S:130,70

S:230,70

S:330,70

S:430,70

S:530,70

S:630,70
```

* [CR] and [LF] represent Carriage Return (0x0D) and Line Feed (0x0A) respectively.

7-3-2. Receiving Responses (Commands 1-6)

- **Timeout Waiting for Command Response from MFR**
  Set the **timeout** period (maximum permitted time until its response returns from the MFR unit) to **1 second** for short message commands and to **5 seconds** for long message commands.

- **If Sending Commands Successively:**
  -For "**X:**", "**B:C**", "**P:**" and "**W:**" commands, send the next command **after** a **prompt** returns.
  -For "**S?**", "**X?**", "**P?**", "V?", "**B:E**" and "**Z:**" commands, send the next command **after** a **prompt and reply messages** return.
  -For "**S?**" and "**Z:**" commands as well as "**V?**" and "**B:E**" commands after executing many preset commands, send the next command **after** having finished receiving **all strings** of reply messages.

Ex. 1)
Allows to send the next command when receiving a prompt.
Resends the previous command when the timeout period (5 seconds) have elapsed without reply after sending a command.

Ex. 2)
Allows to send the next command when receiving a prompt.
Resends the previous command when the timeout period (5 seconds) have elapsed without reply after sending a command.
Recognizes and uses "S" responses as tallies (crosspoint states).

Ex. 3)
Allows to send the next command when receiving a prompt.
Recognizes and uses "S" responses as tallies (crosspoint states).
Resends the previous command when the timeout period (5 seconds) have elapsed without reply after sending a command.
Sets the maximum number of continuous resendings, because crosspoints cannot be changed if they are locked or inhibited to change.

Ex. 4)
Allows to send the next command when receiving a prompt.
Resends the previous command when the timeout period (5 seconds) have elapsed without reply (echo) after sending a command.

Ex. 5)
Allows to send the next command when receiving a prompt.

- **Response Message Evaluation Example:**

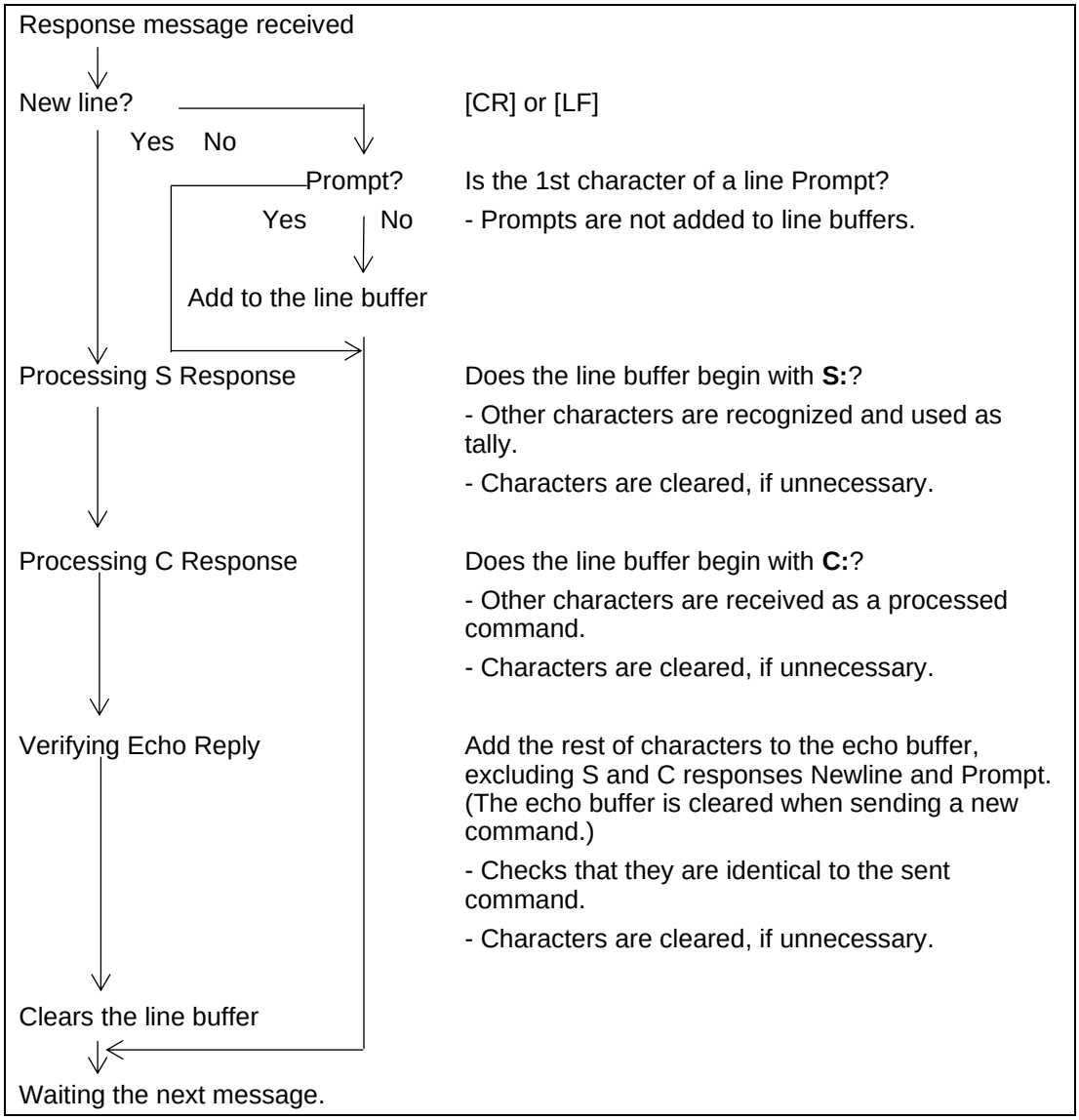

- **If Commands are Overlapped:**
  Two or more commands are sent from different terminals (via serial or LAN interface, or Remote Control units), all command results (C and S responses) are sent to all these terminals from the MFR.
  The following command examples shows how overlapped commands are processed.

Ex.) Assume that the following commands are overlapped:
Terminal 1 sent "@ X:0/2,4."
Terminal 2 sent "@ X:123456/30,70."

Message examples returned to Terminal 1

1-(A)	@ X:0/2,4[CR] [CR][LF]>
1-(B)	[CR][LF] C:0/2,4:IA[CR][LF]
2-(B)	[CR][LF] C:123456/30,70...S5:IA[CR][LF]
1-(C)	[CR][LF] S:02,4[CR][LF]
2-(C)	[CR][LF] S:130,70[CR][LF]
2-(C)	[CR][LF] S:230,70[CR][LF]
2-(C)	[CR][LF] S:330,70[CR][LF]
2-(C)	[CR][LF] S:430,70[CR][LF]
2-(C)	[CR][LF] S:530,70[CR][LF]
2-(C)	[CR][LF] S:630,70[CR][LF]

Terminal display

```
@ X:0/2,4
>
C:0/2,4:IA

C:123456/30,70...S5:IA

S:02,4

S:130,70

S:230,70

S:330,70

S:430,70

S:530,70

S:630,70
```

Message examples returned to Terminal 2

2-(A)	@ X:123456/30,70[CR] [CR][LF]>
1-(B)	[CR][LF] C:0/2,4:IA[CR][LF]
2-(B)	[CR][LF] C:123456/30,70...S5:IA[CR][LF]
1-(C)	[CR][LF] S:02,4[CR][LF]
2-(C)	[CR][LF] S:130,70[CR][LF]
2-(C)	[CR][LF] S:230,70[CR][LF]
2-(C)	[CR][LF] S:330,70[CR][LF]
2-(C)	[CR][LF] S:430,70[CR][LF]
2-(C)	[CR][LF] S:530,70[CR][LF]
2-(C)	[CR][LF] S:630,70[CR][LF]

Terminal display

```
@ X:123456/30,70
>
C:0/2,4:IA
C:123456/30,70...S5:IA

S:02,4

S:130,70

S:230,70

S:330,70

S:430,70

S:530,70

S:630,70
```

* C responses are sent before S responses in some cases.

7-3-3. Channel Name Request Commands (7)

K? Commands allow you to obtain Source and Destination names in ASCII and/or in Kanji set in the MFR Web-based Control menu.

◆ **Command Format**

Command	Command response
@[sp]K?<SorD><AorK>,<Ofset>	K:<SorD><AorK><No.>,<Dat>

BYTE No.	1	2	3	4	5	6	7	8-10	11
Command	@	[sp]	K	?	S	A	,	000-3FF	CR
					D	K		000-1FF	

BYTE No.	1	2	3	4	5	6	7-9	10	11-		
Response	CR	LF	K	:	S	A	000-3FF	,		CR	LF
					D	K	000-1FF				

Command Response	BYTE 5	<S or D> Select between S (Source) or D (Destination) S: Source, D: Destination
	BYTE 6	<A or K> Select A (Ascii) or K (Kanji) for names.
Command	BYTE8-10	<Offset> Specify the start number of channels. Source: 000-3FF, Destination: 000-1FF
Response	BYTE7-9	<No.> Indicates the channel number. Source: 000-3FF, Destination: 000-1FF
Response	BYTE11-	<Dat> Indicates the channel name in Ascii or Kanji using hex characters (max. 128 bytes). Character code for Ascii names: **Ascii** Character code for Kanji names: **UTF-8**
Command Response	CR	Carriage return
	LF	Line feed

Up to 32 channel names can be obtained per a single request.

Note that the number of request channels exceeds the system maximum size, no data will return for the exceeded channels.

► See the [Web-based Control: **SystemSize/LevelName** page].

◆ Command Example 1: Requesting the Source Channel 1 Ascii Name

➢ Web-based Control (Source Name menu)

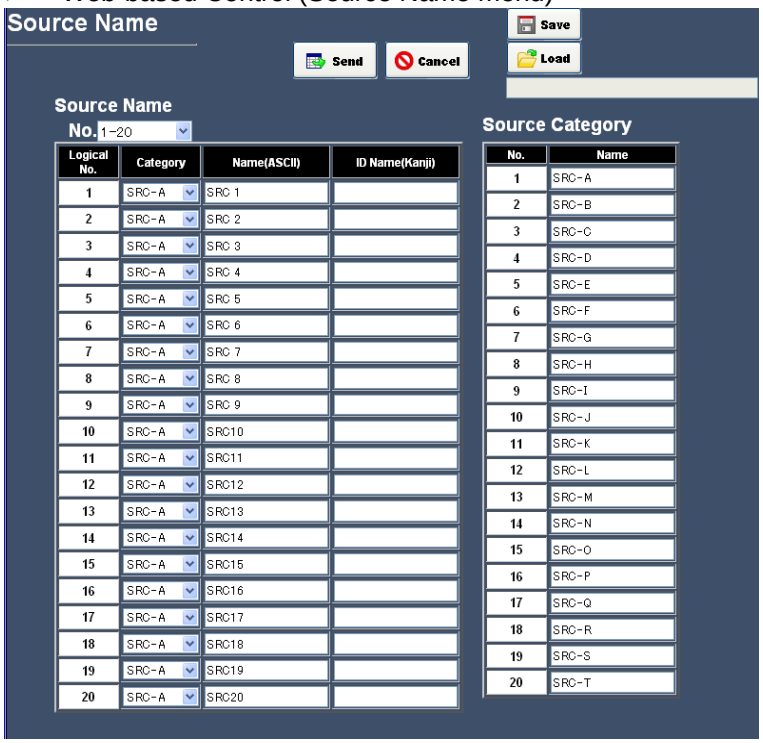

➢ Terminal display

Command	@ K?SA,000

Response	@ K?SA,000	Echo
	K:SA**000**,5352432031	Ascii Name for Source **Channel 1** is SRC 1.
	K:SA**001**,5352432032	Ascii Name for Source **Channel 2** is SRC 2.
	K:SA**002**,5352432033	Ascii Name for Source **Channel 3** is SRC 3.
	I	
	K:SA**01F**,5352433332	Ascii Name for Source **Channel 32** is SRC32.
	>	Prompt

➢ Response details

K:	S	A	000,	53	52	43	20	31
	Source	ASCII	Channel 1	S	R	C	[sp]	1

◆ **Command Example 2: Requesting the Destination Channel 101 Kanji Name**

➢ Web-based Control (Destination Name menu)

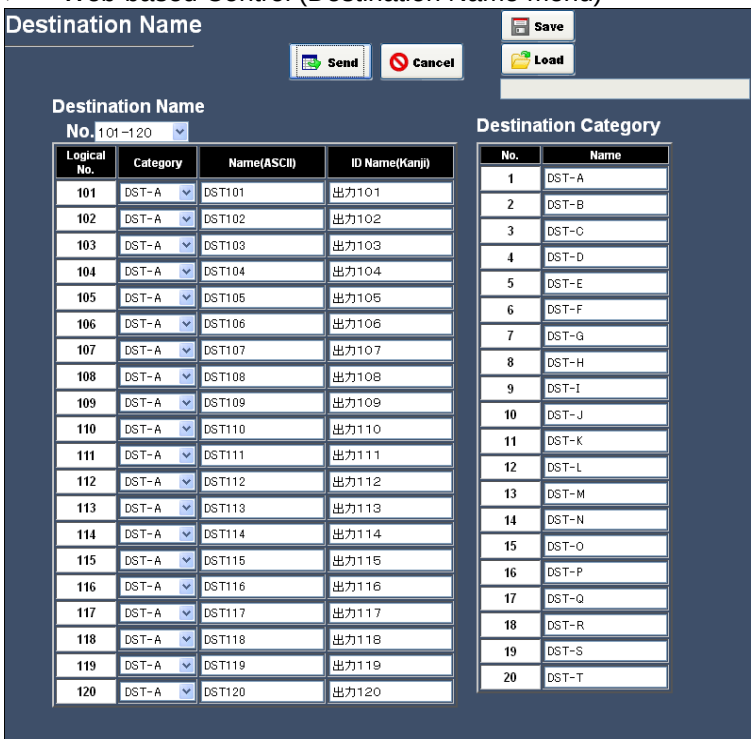

➢ Terminal display

Command	@ K?DK,064

Response	@ K?DK,064	Echo
	K:DK**064**,E587BAE58A9BEFBC91EFBC90EFBC91	Kanji Name for Destination **Channel 101** is 出力１０１.
	K:DK**065**,E587BAE58A9BEFBC91EFBC90EFBC92	Kanji Name for Destination **Channel 102** is 出力１０２.
	K:DK**066**,E587BAE58A9BEFBC91EFBC90EFBC93	Kanji Name for Destination **Channel 103** is 出力１０３.
	I	
	K:DK**083**,E587BAE58A9BEFBC91EFBC93EFBC92	Kanji Name for Destination **Channel 132** is 出力１３２.
	>	Prompt

➢ Response details

K:	D	K	064,	E587BA	E58A9B	EFBC91	EFBC90	EFBC91
	Destination	Kanji	Channel 101	出	力	1	0	1

K:	D	K	065,	E587BA	E58A9B	EFBC91	EFBC90	EFBC92
	Destination	Kanji	Channel 102	出	力	1	0	2

◆ **Command Example 3: Requesting the Source Channel 65 Kanji Name**

➢ Web-based Control (Source Name menu)

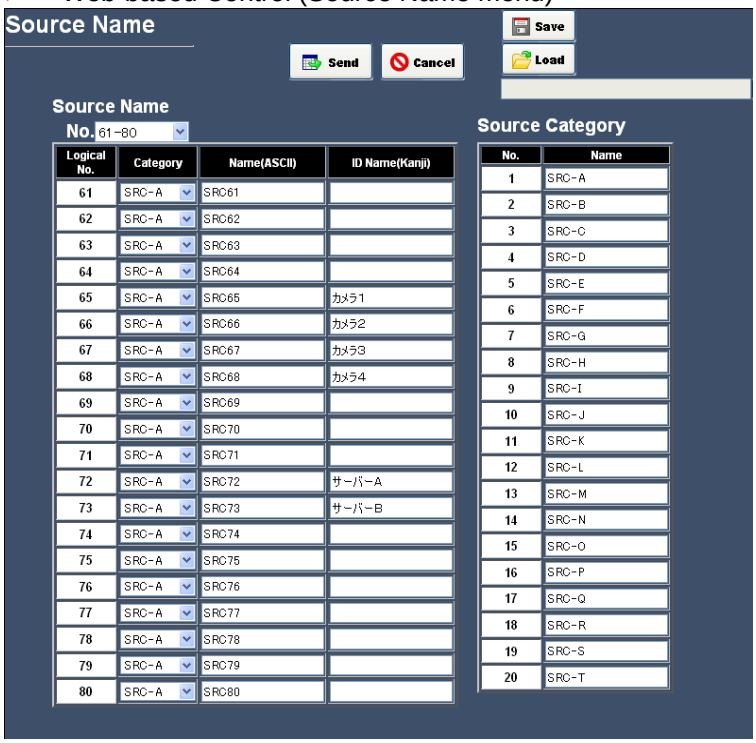

➢ Terminal display

Command	@ K?SK,040

Response	@ K?SK,040	Echo
	K:SK**040**,E382ABE383A1E383A9EFBC91	Kanji Name for Source **Channel 65** is カメラ１.
	K:SK**041**,E382ABE383A1E383A9EFBC92	Kanji Name for Source **Channel 66** is カメラ２.
	K:SK**042**,E382ABE383A1E383A9EFBC93	Kanji Name for Source **Channel 67** is カメラ３.
	K:SK**043**,E382ABE383A1E383A9EFBC94	Kanji Name for Source **Channel 68** is カメラ４.
	K:SK**044**,	Kanji Name for Source **Channel 69** is empty.
	K:SK**045**,	Kanji Name for Source **Channel 70** is empty.
	K:SK**046**,	Kanji Name for Source **Channel 71** is empty.
	K:SK**047**,E382B5E383BCE38390E383BCEF BCA1	Kanji Name for Source **Channel 72** is サーバーＡ.
	I	
	K:SK**05F**,	Kanji Name for Source **Channel 96** is empty.
	>	Prompt

➢ Response details

K:	S	K	040,	E382AB	E383A1	E383A9	EFBC91
	Source	Kanji	Channel 65	カ	メ	ラ	1

K:	S	K	044,	
	Source	Kanji	Channel 69	(Empty)

K:	S	K	047,	E382B5	E383BC	E38390	E383BC	EFBCA1
	Source	Kanji	Channel 72	サ	ー	バ	ー	A

7-3-4. CPU Status Request Command (8)

This command allows you to indicate which CPU is active in the MFR-3100EX.

◆ **Command format**

Command	Command response
@[sp]A?	A:<ID>

BYTE No.	1	2	3	4	5
Command	@	[sp]	A	?	CR

BYTE No.	1	2	3-4	5	6
Response	A	:	<ID>	CR	LF

<ID>: CPU Unit ID (01 to FE)

◆ **Command Response**

There are two response types whether the CPU is active or passive state.

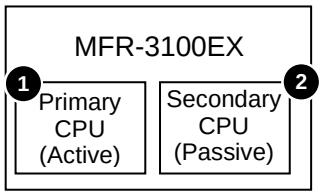

❶ **If the MFR-3100EX CPU is active:**

Response	@ A?	Echo
	A:A	Unit ID number is 10 (0x0A)
		New line
	>	Prompt

❷ **If the MFR-3100EX CPU is Passive:**

Response		No echo, response or prompt

7-3-5. Destination Lock Status Request Command (9)

This command (W?) allows you to indicate the destination lock status in the MFR system.

◆ **Command format**

Command	Command response
@[sp]W?<Lvl>,<Dest>	W! <Lvl><Dest>,<ID>,0 to 2

BYTE No.	1	2	3	4	5	6	7	8
Command	@	[sp]	W	?	<Lvl>	,	<Dest>	CR

<Dest>: Destination channel number

BYTE No.	1	2	3	4	5	6	7	8	9	10	11	12
Response	CR	LF	W	!	<Lvl>	<Dest>	,	<ID>	,	0	CR	LF
										1		
										2		

0: Nothing locked
1: LOCK ALL
2: LOCK OTHER

◆ **Command Response Examples**

If Destination 1 is locked by ID10 Unit using LOCK, Destination 1 status returns as shown below:

Response	@ W?0,0	Echo
	W!00,A,1	Dest 1 is locked by ID10 (0x0A) unit using LOCK ALL.
		CR LF
	>	Prompt

If Destination 2 is locked by ID11 Unit using LOCK OTHER, Destination 2 status returns as shown below:

Response	@ W?0,1	Echo
	W!01,B,2	Dest 2 is locked by ID11 (0x0B) unit using LOCK OTHER.
		CR LF
	>	Prompt

If Destination 3 is not locked, Destination 3 status returns as shown below:

Response	@ W?0,2	Echo
	W!02,0,0	Dest 3 is not locked.
		CR LF
	>	Prompt

7-3-6. Channel Name Import Commands (10)

K: commands allow you to import Source and Destination names from the device that sends K: commands to the MFR system.

◆ **Command Format**

Command	Command response
K:<S or D><S or L or A><No.>,<Dat>	Echo Prompt

BYTE No.	1	2	3	4	5-7	8	9	
Command	K	:	S	S	000-3FF	,		CR
			D	L	000-1FF			
				A				

BYTE 3	<S or D> Select between S (Source) or D (Destination)
BYTE 4	<S or L or A > Select the destination to which names are imported. S: Source Name or Destination Name, ID Name (Kanji) fields on the Web GUI. L: Source Name or Destination Name, Import Name fields on the Web GUI. A: Source Name or Destination Name, Name (ASCII) fields on the Web GUI.
BYTE5-7	<No.> Indicates the channel number. Source: 000-3FF, Destination: 000-1FF
BYTE9-	<Dat> Channel names Strings in Hex characters (max. 128 bytes). Character code: UTF-8
CR	Carriage return

7-3-7. System Size Request Command (11)

F? Commands allow you to obtain MFR-3100EX system size.

◆ **Command Format**

Command	Command response
@[sp]F?<Lvl>	F:<Lvl><Dst Size>,<Src Size>/< Dst Size >,<Src Size>

BYTE No.	1	2	3	4	5	6
Command	@	[sp]	F	?	<Lvl>	CR

BYTE No.	1	2	3	4	5	6	7	8	9	10	11
Response	F	:	<Lvl>	<Dst Size>	,	<Src Size>	/	<Dst Size>	,	<Src Size>	CR

<Dst Size>: Destination channel number
<Src Size>: Source channel number

◆ **Command / Response Example**

Response	@ F?0	Echo
	F:0FF,FF/FF,FF	256 destination channels and 256 source channels.
		CR LF
	>	Prompt

7-3-8. Video Format Commands (12)

Video Format commands allow you to change router video format. The router restarts automatically when commands are accepted. The commands can also change reference and switching point settings.

◆ Command Format

Command description		Command	Command response
(1)	Preset video format, reference and switching point.	@[sp]UF:<YY>/<R#>,<S$> *1	UF!<YY>/<R#>,<S$>
(2)	Set preset settings. *1	@[sp]UE:A	UR!W *2 UR!<YY>/<R#>,<S$>
			UR!E (error response)
(3)	Cancel preset settings.	@[sp]UE:C	UR!C

*1 Reference and Switching Point values are non-compulsory. When they are not set, their present settings are returned in the command response.

*2 "UR!W" is issued at 5-second intervals after receiving "@[sp]UE:A." When the command execution is ready, "UR!<YY>/<R#>,<S$>" is issued.

BYTE	1	2	3	4	5	6	7	8	9	10	11	12	13	14
(1)	@	[sp]	U	F	:	<YY>		/	<R#>		,	<S$>		CR
(2)	@	[sp]	U	E	:	A	CR							
(3)	@	[sp]	U	E	:	C	CR							

<YY>	Video format	**00**: 1080/59.94i **01**: 1080/59.94p **02**: 1080/60i **03**: 1080/60p **04**: 1080/50i **05**: 1080/50p **06**: 720/60p	**07**: 720/59.94p **08**: 720/50p **09**: 1080/30p **0A**: 1080/29.97p **0B**: 1080/25p **0C**: 1080/24p **0D**: 1080/23.98p	**0E**: 1080/30PsF **0F**: 1080/29.97PsF **10**: 1080/25PsF **11**: 1080/24PsF **12**: 1080/23.98PsF **13**: 525/59.94i **14**: 625/50i
<R#>	Reference	**RA**: Auto	**RB**: B.B	**RT**: Tri-Sync
<S$>	Switching point	**SF**: Field	**SO**: Odd	**SE**: Even

* Commands are not executed if no video format is preset or the current video format is the same as preset setting.

◆ Command Example 1

Change Video Format to **720/59.94p**.

Command	Command response
@[sp]UF:07[CR]	[CR][LF]UF!07/RA,SF[CR]
@[sp]UE:A[CR]	[CR][LF]UR!W [CR][LF]UR!07/RA,SF[CR] (The router automatically restarts)

◆ Command Example 2

Change Video Format to **1080/59.94p**, Reference to **Tri-level Sync** and Switching Point to **Field**.

Command	Command response
@[sp]UF:01/RT,SF[CR]	[CR][LF]UF!01/RT,SF[CR]
@[sp]UE:A[CR]	[CR][LF]UR!W [CR][LF]UR!01/RT,SF[CR] (The router automatically restarts)

7-3-9. Audio Input Setting Command (13)

This command allows you to setup audio inputs (streams) for MFR-8MADIPO/8AESPO.
► [Web-based Control: **Audio Settings - Input Type** page]

◆ Command Format

Command	@[sp]AA:<SlotNo.><Grp>/<I-No>,<L-Lvl><L-Src><T#>
Command response	AA:<SlotNo.><Grp>/<I-No>,<L-Lvl><L-Src><T#>

Parameter

<SlotNo.>	0-8	Slot9 to Slot17
<Grp>	0	**0**: Group1
<I-No>	0-7	Input channel (stream) CH1 to CH8
<L-Lvl>	0-7	Level1 to Level8
<L-Src>	0-3FF,, FFF, 7FF	Logical input channel (Logical No./Name) **0-3FF**: SRC1 to SRC1024 **FFF**: No assignment (*1) **7FF**: Main MTX (*2)
<T#>	T0-T4	Input signal type **T0**: None **T1**: SDI **T2**: AES/EBU **T3**: MADI (1 to 32) **T4**: MADI (32 to 64)

(*1) If set to “no assignment” for <L-Src>, set “0” and “T0” for <L-Lvl> and <T#>.
(*2) If set to “Main MTX” for <L-Src>, set “0” for <L-Lvl>.

◆ Command / Response Example

Assign Level1 SRC129 (AES/EBU signal) to Group1 Input Channel 8 (on Slot 11).

Command	Parameter	Description
@ AA:		
2	<SlotNo.>	Slot11
0	<Grp>	Group1
/		
7	<I-No>	CH8
,		
0	<L-Lvl>	Level1
80	<L-Src>	SRC129
T2	<T#>	AES/EBU

Response	Description
AA: 20/7,080T2	The requested assignment has succeeded: Level1 SRC129(AES/EBU signal) to Group 1 Input Channel 8 on Slot 11.

7-3-10. Audio Channel Mapping Command (14)

This command allows you to map audio channels on MFR-8MADIPO/8AESPO.
► [Web-based Control: **Audio Settings - Audio Mapping** page]

◆ Command Format

Command	@[sp]AX:<SlotNo.><Grp>/<O-BNC><O-CH>,<I-No><I-CH>
Command response	AC:<SlotNo.><Grp>/<O-BNC><O-CH>,<I-No><I-CH>:I<ID>

Parameter

<SlotNo.>	0-8	Slot9 to Slot17
<Grp>	0	**0**: Group1
<O-BNC>	0-7	Output channel (stream) CH1 to CH8
<O-CH>	0-1F	Audio channel in the Output stream CH1 to CH32
<I-No>	0-7	Input channel (stream) CH1 to CH8
<I-CH>	0-1F, FF	Audio channel in the Input stream **0-1F**: CH1 to CH32 **FF**: Silence
<ID>	01-FF	Unit ID

◆ Command / Response Example

Assign CH 4 in Audio Input 3 (stream) to CH 17 in Group1 Audio Output 2 (on Slot 9).

Command	Parameter	Description
@ AX:		
0	<SlotNo.>	Slot9
0	<Grp>	Group1
/		
1	<O-BNC>	Audio output (stream) 2
10	<O-CH>	Output channel 17
,		
2	<I-No>	Audio input (stream) 3
03	<I-CH>	Input Channel 4

Response	Description
AC:00/110,23:IA	Received mapping switch request from the unit ID10: Assign CH 4 in Audio Input 3 (stream) to CH 17 in Group1 Audio Output 2 (on Slot 9).

7-3-11. Link Enable / Disable Command (15)

Link Enable/ Disable Commands allow you to enable/ disable audio channel mapping linked to a logical crosspoint switch. (For MFR-8MADIPO/8AESPO)
► [Web-based Control: **Audio Settings - Audio Mapping - Link** page]

◆ **Command Format**

Command	Command response
@[sp]AL:<ONorOFF>	AL:<ONorOFF>

Parameter

<ONorOFF>	0-1	**0**: Disables the Link function **1**: Enables the Link function

◆ **Command / Response Example**

Enable the Link function.

Command	Parameter	Description
@ AL:		
1	<ONorOFF>	Enables the Link function

Response	Description
AL:1	Enables the Link function

7-3-12. Video Format and Output Delay Command (16)

This command allows you to set the video format and output delay. (MFR-8MADIPO/ 8AESPO)
► [Web-based Control: **Audio Settings - Audio Output** page (Format, Delay)]

◆ **Command Sequence**

Command		Command format	Response
(1)	Preset video format and output delay. (*1)	@[sp]AF:<SlotNo.><Grp> /<FORMAT>,<D#>	AF!<SlotNo.><Grp>/<FORMAT>,<D#>
(2)	Set preset settings. (*2)	@[sp]AE:A	<<Normal response>> AR!W AR!<SlotNo.><Grp>/<FORMAT>,<D#> (*3)
			<<Error response>> AR!N
(3)	Cancels preset settings.	@[sp]AE:R	AR!R

(*1) If the setting is the same as the current setting, it is not preset and no response is returned.
(*2) If no preset is set, the command is not executed and an error response is returned.
(*3) "AR!<SlotNo.><Grp>/<FORMAT>,<D #>" is issued when command execution is ready after receiving "@ AE: A". If the video format setting is different from the current setting, the card is automatically rebooted.

Parameter

<SlotNo.>	0-8	Slot9 to Slot17
<Grp>	0	**0**: Group1
<FORMAT>	00, 01, 04, 05, 07, 0F, 12	Video Format **00**: 1080/59.94i **01**: 1080/59.94p **04**: 1080/50i **05**: 1080/50p **07**: 720/59.94p **0F**: 1080/29.97PsF **12**: 1080/23.98PsF
<D#>	D0-D8	Output delay Pattern 1 to Pattern 9 * The output delay varies depending on the video format. (See table below)

FORMAT	Output Delay [µs]								
	D0	D1	D2	D3	D4	D5	D6	D7	D8
00:1080/59.94i	5.93	8.90	11.86	14.83	17.80	20.76	23.73	26.69	29.66
01:1080/59.94p	2.97	4.45	5.93	7.41	8.90	10.38	11.86	13.35	14.83
04:1080/50i	7.11	10.67	14.22	17.78	21.33	24.89	28.44	32.00	35.56
05:1080/50p	3.56	5.33	7.11	8.89	10.67	12.44	14.22	16.00	17.78
07:720/59.94p	4.45	6.67	8.90	11.12	13.35	15.57	17.80	20.02	22.24
0F:1080/29.97PsF	5.93	8.90	11.86	14.83	17.80	20.76	23.73	26.69	29.66
12:1080/23.98PsF	7.41	11.12	14.83	18.54	22.24	25.95	29.66	33.37	37.07

◆ **Command / Response Example**

(1) Set the SDI output video format of Group1 in Slot13 to **1080/59.94p** and Output Delay to **14.83µs** (Pattern 9).

Command	Parameter	Description
@ AF:		
4	<SlotNo.>	Slot13
0	<Grp>	Group1
/		
01	<FORMAT>	1080/59.94p
,		
D8	<D#>	Pattern 9

Response	Description
AF!40/01,D8	Preset settings are done: SDI output video format of Group1 in Slot13 to 1080/59.94p and Output Delay to 14.83µs.

(2) Performs the set changes.

Command	Description
@ AE:A	Set the preset settings.

Response	Description
AR!W	In preparation.
AR!40/01, D8	Setting preset settings starts.

8. Troubleshooting

If any of the following problems occur during operation of your MFR-3100EX, proceed as indicated below to see if the problem can be corrected before assuming a unit malfunction has occurred.

IMPORTANT

If the problem cannot be corrected by performing the procedures below, turn the unit off and then on again. If this still does not correct the problem, contact your dealer.

Problem	Check	Remedy
No image output.	Are there signal inputs to the video input connectors?	Input video signals to the video input connectors.
	Are cables properly connected for the signal inputs?	Connect cables properly.
	Are I/O cards installed into correct slots?	Re-install the I/O cards into their correct slots.
	Is the crosspoint set properly?	Set crosspoints properly.
Unable to control using the remote control panel.	Is the LAN cable properly connected?	Properly connect the LAN cable.
	Is the RU Info page in the Web-based Control indicating NG?	Check the item that is indicated as NG. However, if the Voltage is indicated as NG, contact your FOR-A agent. See the Web-based Control Operation Manual for details.
The secondary CPU is active.	Are both MFR-LAN 1 and MFR-LAN 2 properly connected to the network? (Check the cable and Ethernet hub connections.)	Connect both MFR-LAN 1 and MFR-LAN 2 to the network correctly.
	If network connections are properly made, turn unit power OFF then ON again.	Consult your FOR-A reseller if the secondary CPU is still active after restarting

9. Specifications and Dimensions

9-1. Unit Specifications

9-1-1. MFR-3100EX

Basic specifications

Temperature/ Humidity	0℃ to 40℃/ 30% to 85% (no condensation)
Power	100VAC to 240VAC ±10%, 50/60Hz IN x 2 (MFR-31PS required for redundant power configuration)
Consumption	671VA (661W) at 100 - 120VAC 608VA (510W) at 220 - 240VAC
Dimensions	430 (W) x 177 (H) x 400 (D) mm EIA 4RU 482 (W) (including rack mount brackets)
Weight	25kg (with full options)

Technical specifications

Video Formats	
UHD 4K (12G-SDI) (3G-SDI)	2160p / 59.94, 50 (With MFR-8SDIGB/ 8SDOGB) Single Link 12G-SDI (SMPTE ST 2082-10) Quad Link 3G-SDI (SMPTE ST 425-5)
HD (3G-SDI)	1080p / 60, 59.94, 50 (SMPTE 424M)
HD (HD-SDI)	1080i / 60, 59.94, 50 1080p / 30, 29.97, 23.98, 25, 24 1080PsF / 30, 29.97, 23.98, 25, 24 720p / 60, 59.94, 50 (SMPTE 292M)
SD (SD-SDI)	525/59.94i, 625/50i (SMPTE 259M) (With MFR-8SDI/ 8SDO)
DVB-ASI	Compliant to EN 50083-9 (MFR-8SDI/ 8SDO)
Matrix Size	Min. 8 x 8 to Max. 64 x 72 (Max. logical matrix: 512 x 512) Number of input slots: 8 Number of output slots: 9 (Expandable on an 8-channel basis)
Video Input	
MFR-8SDI (as video input)	3G/HD/SD-SDI Input Card (Max. 8 cards) - 75-ohm BNC x 8 Cable Equalization 3G/HD-SDI: 100 m (5C-FB cable) SD-SDI: 200 m (5C-2V cable)
MFR-8SDIGB	12G/3G-SDI Input Card (Max. 8 cards) - 75-ohm BNC x 2 (12G-SDI or 3G-SDI) - 75-ohm BNC x 6 (3G-SDI) I/O delay selection Delay (H) (0.3H-1H), 1 frame, 1 frame+ Delay (H) Cable Equalization 12G-SDI: 100 m (L-5.5CUHD cable) 3G-SDI: 100 m (5C-FB cable)
Video Output	
MFR-8SDO	3G/HD/SD-SDI Output Card (Max. 9 cards) - 75 ohm BNC x 8 (Auto reclocking)

MFR-8SDOGB	12G/3G-SDI Output Card (Max. 9 cards)) -75 ohm BNC x 2 (12G-SDI or 3G-SDI) -75 ohm BNC x 6 (3G-SDI) I/O delay selection: Delay (H) (0.3H-1H), 1 frame, 1 frame+ Delay (H)
MFR-8SDODL	3G/HD-SDI Output Card (Max. 9 cards) -75 ohm BNC x 8 Phase adjustment for 3G/HD-SDI output - Output phase: +1H to +5H referring to REF IN signal - Adjustment range (variable depending on the output phase) +1H output: -4.1H to +0.9H +2H output: -3.1H to +1.9H +3H output: -2.1H to +2.9H +4H output: -1.1H to +3.9H +5H output: -0.1H to +4.9H - Quiet Switch OFF: Passes through all ANC data in inputs (W/o measures for signal switching effects) - Quiet Switch ON: Passes through ANC data below (reproduced) - SMPTE ST352 (Video payload ID information) - SMPTE ST299-1 (Embedded audio) 16-channel (Group1-4), PCM, 48kHz 24bit, Synchronous
Audio Input	
MFR-8AAI	Analog Audio Input Card with A/D converter (Max. 8 cards) - 25-pin D-sub (female) x 2 (8 stereo pairs, 16 channels) - Balanced or unbalanced, 600-ohm or high impedance - A/D conversion: 48kHz / 24bit
MFR-8AESI	AES/EBU Audio Input Card (Max. 8 cards) - 75-ohm, BNC x 8 (8 stereo pairs, 16 channels) - 48kHz / 24bit (No limitation for MFR-8AESO)
MFR-8SDI (as audio input)	MADI Audio Input Card (Max. 8 cards) - 75-ohm, BNC x 8 (MADI x 8) - MADI: 64-channel, 48kHz / 24bit
Audio Output	
MFR-8AAO	Analog Audio Output Card with D/A converter (Max. 9 cards) - 25-pin D-sub (female) x 2 (8 stereo pairs. 16 channels), - Balanced or unbalanced, 600-ohm or 100-ohm - D/A conversion: 48kHz / 24bit
MFR-8AESO	AES/EBU Audio Output Card (Max. 9 cards) - 75-ohm BNC x 8 (8 stereo pairs. 16 channels) - 48kHz / 24bit (No limitation for MFR-8AESI)
MFR-8MADIPO	MADI/SDI Output Card (Max. 9 cards) - 75-ohm BNC x 8 (MADI/SDI x 8) Audio output - MADI: 64-channel, 48kHz / 24bit (AES10-2008(MADI)) - Audio I/O delay: 1 ms or less Video output: - 3G-SDI: 1080p / 59.94, 50 - HD-SDI: 1080i / 59.94, 50 1080PsF / 29.97, 23.98 720p /59.94 - Additional delay time: Delay (H) (0.2H-1H)
MFR-8AESPO	AES/EBU Audio Output Card (Max. 9 cards) - 75-ohm BNC x 8 (8 stereo pairs. 16 channels) - 48kHz / 24bit - Audio I/O delay: 1 ms or less

Multiviewer	
MFR-16MV	16 SDI output card with multiviewer function (Up to 4 cards) - 2 slots required per card - 75-ohm BNC x 16
Reference Input	BB: 0.429 Vp-p (NTSC)/0.45 Vp-p (PAL) or Tri-level Sync: 0.6 Vp-p 75-ohm BNC x 1, loop-through (Terminate with 75-ohm BNC terminator, it unused.)
Interfaces	
MFR-LAN	10/100Base-TX, RJ-45 x 2 (For connecting up to 128 RU/GPI units.) (Second LAN port used in redundant CPU configuration)
PC-LAN	10/100/1000 Base-T, RJ-45 x 2 (For PC and external device operation) (Second LAN port used in redundant CPU configuration)
ALARM	9-pin D-sub (female) x 1 (Power alarm, fan alarm, crosspoint error, CPU changeover and secondary CPU error)

9-1-2. MFR-GPI

Basic specifications

Temperature/Humidity	0℃ to 40℃ / 30% to 85% (no condensation)
Power	+12VDC pin connector x 2 (redundant power supply in standard configuration)
Consumption	100 V AC to 120 V AC: 8 VA (4 W) 220 V AC to 240 V AC: 13 VA (6 W)
Dimensions	430 (W) x 44 (H) x 110 (D) mm EIA 1 RU 480 (W) (Including rack mount brackets)
Weight	2 kg
Consumables	AC adapter: Replace every 5 years

Technical specifications

Number of connections	Max. 4 (MFR-GPI units only) Max. 128 (including Main, MFR-RU Series, MFR-GPI and MFR-TALM units)
Interface	
MFR-LAN	10/100BASE-TX RJ-45 x 1 (Ethernet hub is needed for Main and multiple units connections.)
SERVICE	RS-232C: 9-pin D-sub (male) x 1 (for maintenance)
GPI IN/TALLY OUT	37-pin D-sub (female) x 4 128-input/output (user assignable)
SERIAL 1-4	RS-232C/422 (selectable): 9-pin D-sub (male) x 4

9-1-3. MFR-TALM

Basic specifications

Temperature	0°C to 40°C
Humidity	30% to 85% (no condensation)
Power	+12 V DC pin connector x 2 (redundant power supplies in standard configuration)
Consumption	100 V AC to 120 V AC: 17 VA (9 W) 220 V AC to 240 V AC: 20 VA (9 W)
Dimensions	212 (W) x 44 (H) x 161 (D) mm EIA 1 RU half size 480 (W) (Including single or dual rack mount brackets)
Weight	2kg
Consumables	AC adapter: Replace every 5 years

Technical specifications

Number of connections	Max. 1 (an MFR-TALMI unit only) Max. 128 (including Main, MFR-RU Series, MFR-GPI and MFR-TALM units)
Interface	
MFR-LAN	10/100/1000BASE-T RJ-45 x 1 (Ethernet hub is required for Main and multiple unit connections.)
PC-LAN	10/100BASE-TX RJ-45 x 1 (for PC or other external devices)
GPI IN /TALLY OUT	37-pin D-sub (female) x 1 32-input/output (user assignable)
RS-422	9-pin D-sub (male) x 4

9-2. External Dimensions

9-2-1. MFR-3100EX

(All dimensions in mm)

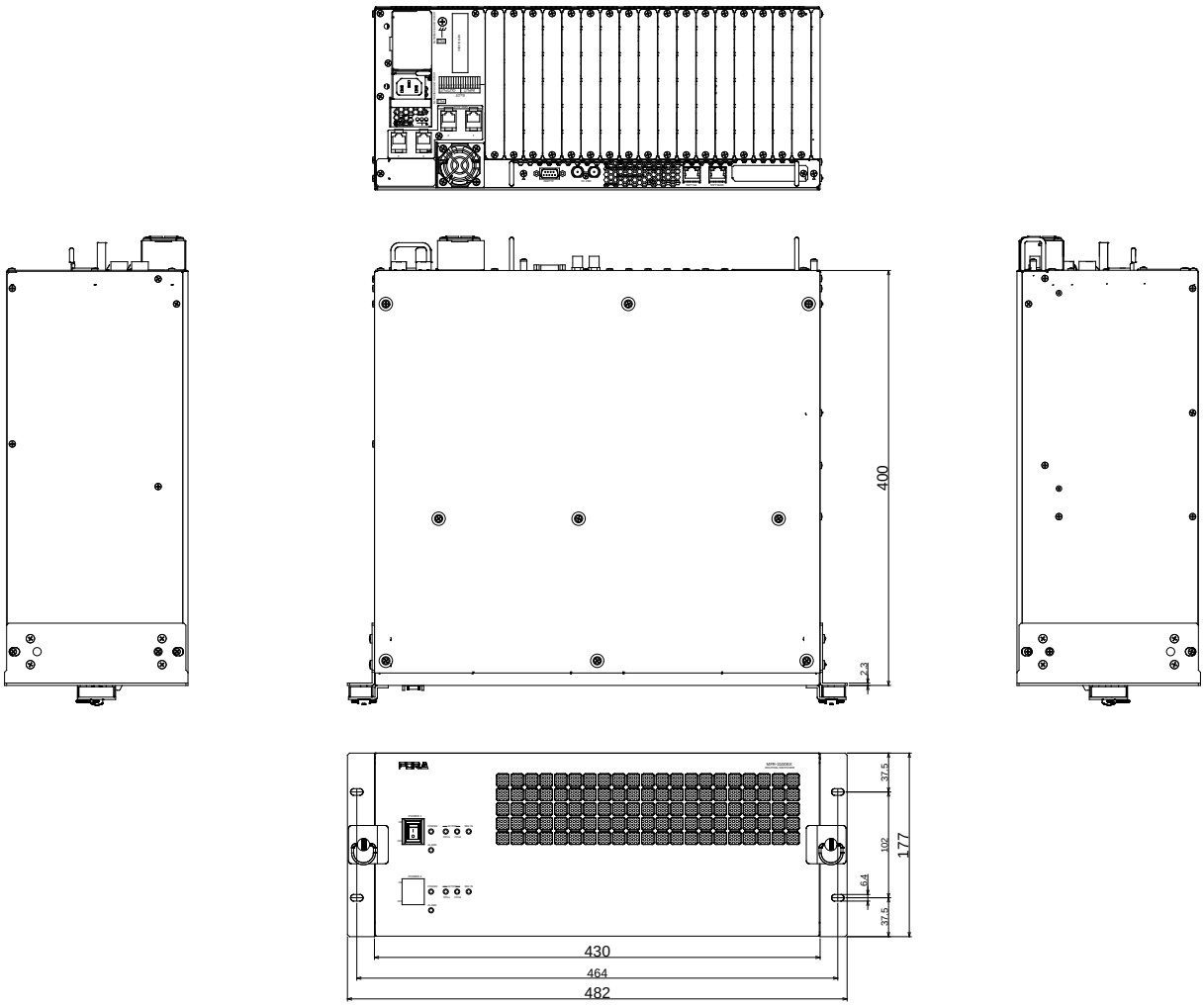

9-2-2. MFR-GPI

(All dimensions in mm)

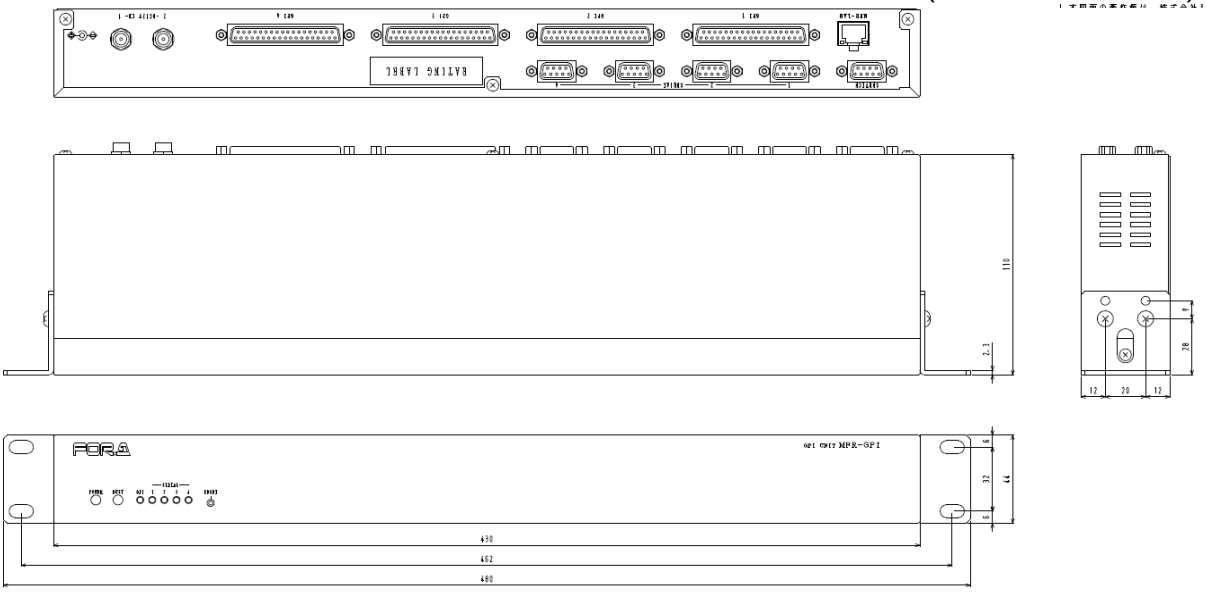

9-2-3. MFR-TALM

(All dimensions in mm)

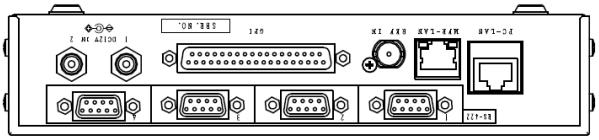

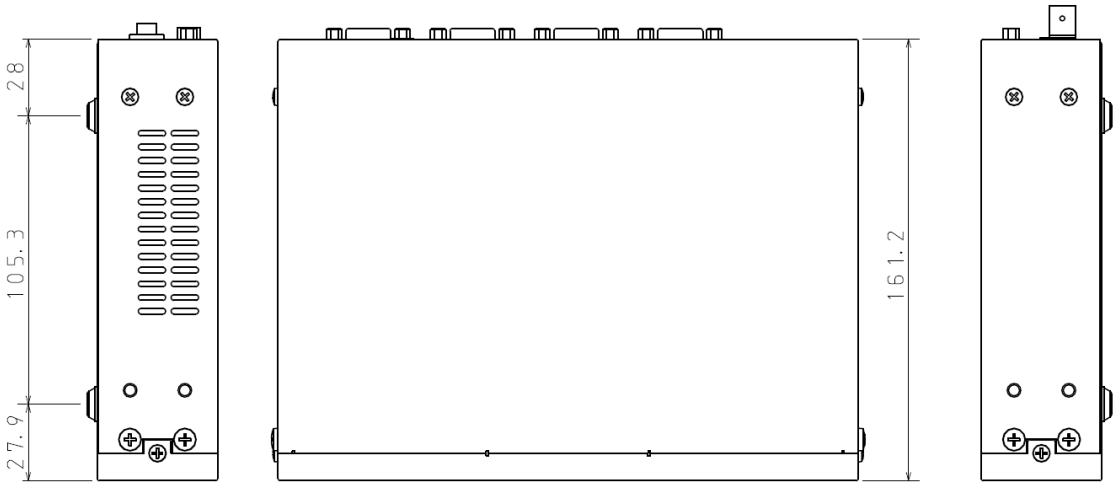

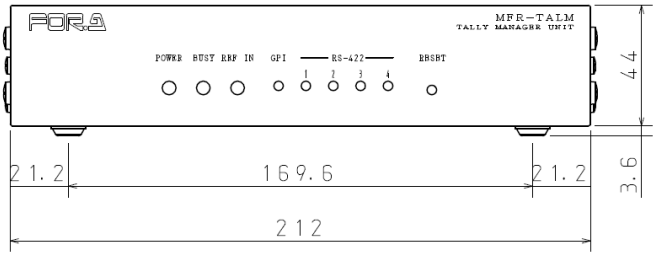

◆ **If attaching the rack mount brackets (Dual / Single)**

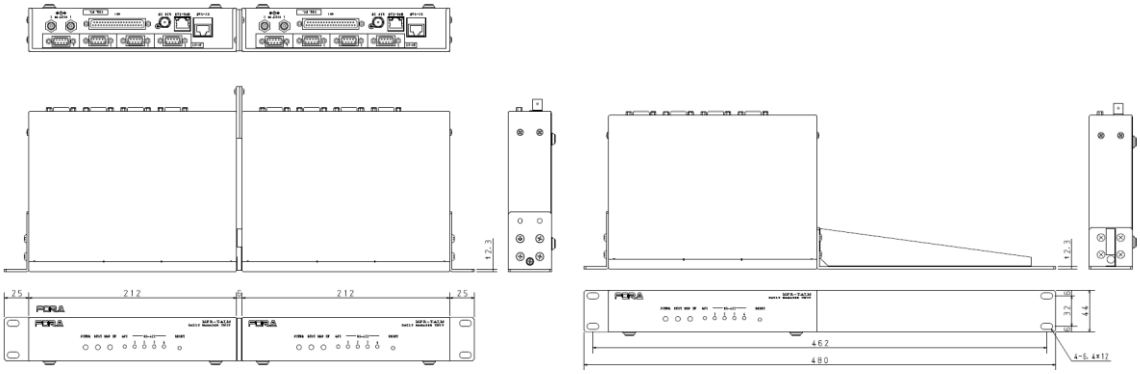

Warning

This equipment has been tested and found to comply with the limits for a Class A digital device, pursuant to Part 15 of FCC Rules. These limits are designed to provide reasonable protection against harmful interference when the equipment is operated in a commercial environment. This equipment generates, uses, and can radiate radio frequency energy and, if not installed and used in accordance with the instruction manual, may cause harmful interference to radio communications. Operation of this equipment in a residential area is likely to cause harmful interference, in which case the user will be required to correct the interference at his own expense.

December 2, 2022 Printed in Japan

FOR-A COMPANY LIMITED

Head Office 3-8-1 Ebisu, Shibuya-ku, Tokyo 150-0013, Japan
Overseas Division Tel: +81(0)3-3446-3936 Fax: +81(0)3-3445-5116

FOR-A Corporation of America Corporate Office/Service Center

11155 Knott Ave., Suite G, H & I, Cypress, CA 90630, U.S.A.
Tel: +1 714-894-3311 Fax: +1 714-894-5399

FOR-A Corporation of America Northeast Office

1360 Clifton Ave., Clifton, NJ 07012, U.S.A.
Tel: +1 973-220-8471 Fax: +1 714-894-5399

FOR-A Corporation of America Southeast Office

Tel: +1-305-773-7608

FOR-A Corporation of America Support Center

2400 N.E. Waldo Road, Gainesville, FL 32609, U.S.A.
Tel: +1 352-371-1505 Fax: +1 714-894-5399

FOR-A Latin America and the Caribbean Miami Office

Tel: +1 657-600-5759

FOR-A Latin America and the Caribbean Sao Paulo Office

Tel: +55 (0)11-99913-3751

FOR-A Europe S.r.l.

Via Volturno, 37, 20861, Brugherio MB, Italy
Tel: +39 (0)39-916-4811

FOR A UK Limited

Trident Court, 1 Oakcroft Road Chessington, KT9 1BD, U.K.
Tel: +44 (0)20-3044-2935 Fax: +44 (0)20-3044-2936

FOR-A Italia S.r.l.

Via Volturno, 37, 20861, Brugherio MB, Italy
Tel: +39 (0)39-881-086

FOR-A Corporation of Korea

1007, 57-5, Yangsan-ro, Yeongdeungpo-gu, Seoul 07271, Korea
Tel: +82 (0)2-2637-0761 Fax: +82 (0)2-2637-0760

FOR-A China Limited

1618 Huateng Building, No. 302, 3 District, Jinsong, Chaoyang, Beijing 100021, China
Tel: +86 (0)10-8721-6023 Fax: +86 (0)10-8721-6033

FOR-A Middle East Africa Office

Aurora Tower, Office 1407, Dubai Media City, P.O. Box 502688, Dubai, UAE
Tel: +971 (0)4 551 5830 Fax: +971 (0)4 551 5832

FOR-A India Private Limited. Mumbai Office

2nd Floor, Valecha Chambers, Link Road, Andheri (W), Mumbai 400053, India
Tel: +91-(0)22-2673-3623 Fax: +91-(0)22-2639-3415

FOR-A India Private Limited. Delhi Office

8th floor, World Trade Tower, Sector-16, Noida, Uttar Pradesh 201301, India
Tel: +91-(0)12-0423-8674

FOR-A South East Asia Office

Studio 09, Rm. A1, 3/F., Phase 1, Hang Fung Ind. Bldg., 2G Hok Yuen St., Hung Hom, Hong Kong
Tel: +852 2110-1352

You can download manuals and other documents by registering your email address.
http://www.for-a.com/