USER MANUAL

MFR-1616/1616R/1616A
MFR-3216RPS
MFR-3232RPS

Multi Format Routing Switcher

MFR-GPI
MFR-TALM

14th Edition

FOR-A COMPANY LIMITED

Edition Revision History

Edit.	Rev.	Date	Description	Section
1	-	2011/03/24		
2		2012/01/24	Rear Panel figures and External Dimensions. Amended TAKE function, enhanced MFR-18RU, etc.	2-1-2, 2-1-4, 3, 4
3	-	2012/05/30	Changed alarm description. RS Series compatibility option is cancelled. Added LAN interface support, etc.	2-1-3 1-2, 2-1-2, 9-1-1 7, etc.
4	-	-	(Not released)	-
5	-	2013/01/08	Added MFR-16RU and MFR-16RUD. Changed SERIAL and ALARM connectors. Changed Multi-panel Operation.	 2-1-3 5-6-1
6	-	2013/04/30	Added MFR-TALM. Factual errors corrected.	2-4, 3-2, 9-1-7, 9-2-11
7	-	-	(Not released)	
7	1	2013/09/05	Changed Power Consumption. Added MFR-1616A. Added MFR-16RUW and MFR-32RUW. Added Setup Menu for MFR-18RU. Added Setup Menu for other MFR RU units.	9-1 2-2-1, 2-2-2, 5-1-2-1, 9-1-6, 9-1-7, 9-2-10, 9-2-11 5-6 5-7
7	2	2013/09/10	Changed MFR-1616A power LED indication. Factual errors corrected.	2-1-1
8	-	2013/12/24	Added Main Unit Link function Added MFR-64RUW. RU current level is applied to RU Salvos. Added Group LOCK OTHER function.	3-2 2-2, 9-1-9, 9-2-13, etc. 6-2-2 6-3-2
9	-	2014/10/31	Enabled group button assignments Added 2-way Lock buttons (by short and long press)	5-1-2 5-2 to 5-4
10	-	2015/03/18	Added CONTROL button operation (MFR-18RU) Added color setting for the locked current destination button. Added unlock duration setting for LOCK OTHER/LOCK ALL. Added text color tuning for remote control buttons.	Sec. 4, 5-1, 6-1-1 Sec. 5-2 Sec. 6-3-2 Sec. 8
11	-	2015/04/20	Supported MFR-16RUTA.	
12	-	2015/05/19	Supported MFR-3216RPS/3232RPS. Removed Button Label Templates. (They are published on the homepage.)	 Appendix
12	1	2015/09/14	Added notes on button labels.	Sec. 2-2-1
13	-	2015/11/11	Supported MFR-18RUA/39RUA.	
13	1	2016/07/04	Added “Operation Tips”.	Appendix
13	2	2018/04/02	Deleted MFR-RU Series to separate user manual. Deleted Installing the AC Cord Retaining Clip System Size Request Command added. Video Format Commands added.	Throughout Sec. 4-3-6 Sec. 4-3-7

14	-	2022/11/01	Deleted MFR-3216/3232 due to discontinued products. Supported MFR-8RUA. Channnel Name Import Commands added. Deleted a CD-ROM from the packing list.	Throughout Sec. 4-3-6 Upon Receipt

◆ **Firmware / Software Versions and Supported Hardware / Features**

Main Unit Firmware Version (*1)		GUI Version (*2)	Supported Hardware	Supported Feature
MFR-1616/1616R/3216/3232	MFR-1616A			
1.22 or higher	1.23 or higher	1.61 or higher	MFR-64RUW	Main Unit Link

(*1) Click [Primary CPU] in the [Web-based Control: **System Settings**- **MU Info** page] to see your version number under **Firmware Version**.

(*2) The GUI (Web-based control software) version is displayed on the browser's title bar.

Precautions

Important Safety Warnings

[Power]

Caution	Operate unit **only** at the specified supply voltage.
	Disconnect the power cord via the power plug only. Do **not** pull on the cable portion.
Stop	Do **not** place or drop heavy or sharp-edged objects on the power cord. A damaged cord can cause fire or electrical shock hazards. Regularly check the power cord for excessive wear or damage to avoid possible fire / electrical hazards.
Caution	Ensure the power cord is firmly plugged into the AC outlet.

[Grounding]

Caution	**Ensure** the unit is properly grounded at all times to prevent electrical shock.
Hazard	Do **not** ground the unit to gas lines, units, or fixtures of an explosive or dangerous nature.

[Operation]

Hazard	Do **not** operate the unit under hazardous or potentially explosive atmospheric conditions. Doing so could result in fire, explosion, or other hazardous results.
Hazard	Do **not** allow liquids, metal pieces, or other foreign materials to enter the unit. Doing so could result in fire, other hazards, or a unit malfunction.
	If a foreign material does enter the unit, turn the power off and **immediately** disconnect the power cord. Remove the material and contact an authorized service representative if damage has occurred.

[Transportation]

Hazard	**Handle** with care to avoid impact shock during transit, which may cause malfunction. When you need to transport the unit, use the original or suitable alternative packing material.

[Circuitry Access]

	Do **not** remove covers, panels, casing, or access the circuitry with power applied to the unit. Turn the power off and disconnect the power cord prior to removal. Internal servicing / adjustment of unit should only be performed by qualified personnel.
Stop	Do **not** touch any parts / circuitry with a high heat factor. Capacitors can retain enough electric charge to cause mild to serious shock, even after the power has been disconnected. Capacitors associated with the power supply are especially hazardous.
Hazard	Unit should **not** be operated or stored with cover, panels, and / or casing removed. Operating the unit with circuitry exposed could result in electric shock / fire hazards or a unit malfunction.

[Potential Hazards]

Caution	If abnormal odors or noises are noticed coming from the unit, immediately turn the power off and disconnect the power cord to avoid potentially hazardous conditions. If problems similar to the above occur, contact an authorized service representative **before** attempting to operate the unit again.

[Rack Mount Brackets, Ground Terminal, and Rubber Feet]

Caution	To rack-mount or ground the unit, or to install rubber feet, do not use screws or materials other than those supplied. Doing so may cause damage to the internal circuits or components of the unit. If you remove the rubber feet that are attached to the unit, do not reinsert the screws that secure the rubber feet.

[Consumables]

Caution	Consumable items that are used in the unit must be periodically replaced. For further details on which parts are consumables and when they should be replaced, refer to the specifications at the end of the User Manual. Since the service life of the consumables varies greatly depending on the environment in which they are used, such items should be replaced at an early date. For details on replacing consumable items, contact your dealer.

Upon Receipt

MFR-1616/ MFR-1616R/ MFR-1616A/ MFR-3216RPS/ MFR-3232RPS units and their accessories are fully inspected and adjusted prior to shipment. Operation can be performed immediately upon completing all required connections and operational settings.

◆ **Main Unit**

ITEM	QTY	REMARKS
MFR-1616/1616R/1616A MFR-3216RPS MFR-3232RPS	1	
AC Cord	1 set	AC cord retainer clip included
EIA Rack Mount Brackets	1 set	
Rubber Feet	4	
SERIAL port setting notes	1	Excluding MFR-1616A
Quick Setup Guide	1	

Options

ITEM	QTY	REMARKS
MFR-SRCPU	1	Redundant CPU card (for MFR-1616R/3216RPS/3232RPS)
MFR-SRPS	1 set	Redundant power supply unit (with AC cord and AC cord retaining clip.)(for MFR-1616/1616R)
MFR-32PS	1 set	Redundant power supply unit (with AC cord and AC cord retaining clip.)(for MFR-3216RPS/3232RPS)
MFR-8RUA/18RUA/39RUA/40RU MFR-16RU/16RUD/16RUTA MFR-16RUW/32RUW/64RUW	1	Remote Control Unit

◆ **Interface Expansion Unit**

ITEM	QTY	REMARKS
MFR-GPI	1	
AC Adaptor *	1	With DC lock plug
AC Cord	1	
EIA Rack Mount Brackets	1 set	
LAN Cable (straight)	1	

* Depending on the production date, AC adapter is supplied without DC lock plug, but with a DC cable retaining clip.

◆ **Tally Manager Unit**

ITEM	QTY	REMARKS
MFR-TALM	1	
AC Adaptor *	1	With DC lock plug
AC Cord	1	
EIA Rack Mount Brackets (optional)	1 set	Single- or Dual-unit type

* Depending on the production date, AC adapter is supplied without DC lock plug, but with a DC cable retaining clip.

◆ **MFR Remote Relay Unit**

ITEM	QTY	REMARKS
MFR-RULINK	1	
AC Adaptor	1	With DC lock plug
AC Cord	1	
EIA Rack Mount Brackets (optional)	1 set	Single- or Dual-unit type

Check

Check to ensure no damage has occurred during shipment. If damage has occurred, or items are missing, inform your supplier immediately.

About This Manual

This manual is intended to help the user easily operate this product and make full use of its functions during operation. Before connecting or operating your unit, read this user manual thoroughly to ensure you understand the product. After reading, it is important to keep this manual in a safe place and available for reference.

Font Conventions

The following conventions are used throughout this manual:

- Shaded text (such as OFF) indicates the setting **parameters** or **values** in the menu.
- References to the MFR Series Web-based Control Software are indicated by [Web-based Control: XXX page].

Table of Contents

1. Prior to Starting

1-1. Welcome

Congratulations! By purchasing MFR-1616 / MFR-1616R / MFR-1616A / MFR-3216RPS / MFR-3232RPS Multi Format Routing Switcher (hereafter called MFR main unit) you have entered the world of FOR-A and its many innovative products. Thank you for your patronage and we hope you will turn to FOR-A products again and again to satisfy your video and audio needs.
FOR-A provides a wide range of products, from basic support units to complex system controllers, which have been increasingly joined by products for computer video based systems. Whatever your needs, talk to your FOR-A representative. We will do our best to be of continuing service to you.

1-2. Features

The MFR-1616, MFR-1616R, MFR-1616A, MFR-3216RPS and MFR-3232RPS comprise a group of multi-format routing switchers with a variety of input/output numbers supporting 3G-SDI, HD-SDI, SD-SDI, ASI, and AES/EBU (MFR-1616A only) signals. In the compact body, the units have inherited various functions of the MFR-5000 such as the capability of linking multiple cases, tally connections with peripheral devices, and automatic source name tracking, to allow the units to be the core product in small to medium size systems.

- Support for 3G-SDI, HD-SDI, SD-SDI, ASI, and AES/EBU (MFR-1616A only) signals with automatic signal recognition that enables operation without concern for the type of signal.
- Various crosspoint control functions such as Salvo, Take, Link, Level operation, and Chop
- Tally linking with FOR-A's video switchers (HANABI Series) and multi viewers. Source name displays on video switchers and multi viewers can be switched in conjunction with switchings controlled in the main unit. MFR routers support TSL and Harris protocol, enabling linkage to other companies' products.
- Built-in webserver for remote control through a web browser
- SNMP support enabling SNMP monitoring system configuration
- Status monitoring for power supply, fan, CPU, SDI input/output, etc.
- CPU board redundancy (MFR-SRCPU option) allowing monitoring of primary CPU board operation via the secondary board
- Immediate and smooth switch over to the secondary board without down time in case of irregularities, as well as stable remote control operation supported by the network redundancy (Supported by MFR-SRCPU option)
- Power unit redundancy for stable power supply against power unit failure or power supply troubles
- Matrix partition and level setting capabilities support a flexible control environment
- Remote control over a main unit from multiple remote control panels (maximum of 128 units can be connected in total including the main unit)
- Remote control panel connectivity for configuring a huge control panel
- Interface expansion unit (MFR-GPI) for additional 128 (32 x 4) GPI/O and 4 serial ports (9-pin D-sub, male)
- MFR-TALM Tally Manager Unit is designed specifically to manage tally and signal name data in the MFR system and the exchange of this data with external devices such as a video switcher, multiviewer etc. The unit performs the task of tally data computation, which is ordinarily undertaken by the MFR main unit, to accelerate the task.
- The Main Unit Link feature allows users to control several main units at the same time or to create an expanded virtual matrix by linking main units.

2. Panel Descriptions

2-1. Main Unit

2-1-1. Front Panel

◆ **MFR-1616 / MFR-1616A**

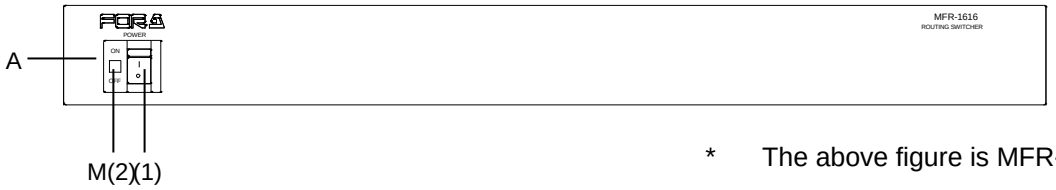

* The above figure is MFR-1616.

◆ **MFR-1616R**

◆ **MFR-3216RPS / MFR-3232RPS**

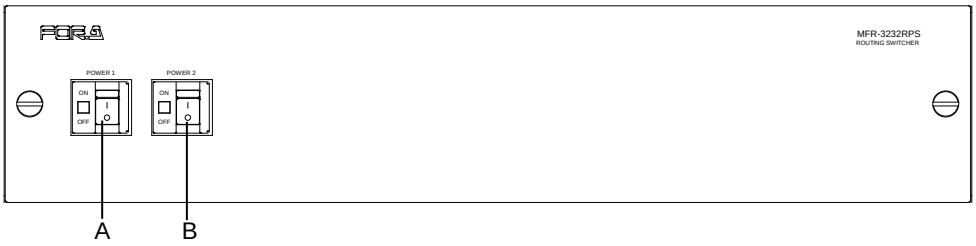

* The above figure is MFR-3232RPS.

No.	Name	Description
A	POWER1	Power switch 1 (standard equipment) (1) Switch to turn unit power On/Off. (2) LED indicator Lit green DC power supply: Normal Unlit DC power supply: Error Lit orange No MFR-LAN connection (MFR-1616A only)
B	POWER2	Power switch 2 (optional equipment) (1) and (2) the same as POWER1.

IMPORTANT

Whenever restarting the main unit, restart the web browser as well.

2-1-2. Rear Panel

◆ **MFR-1616**

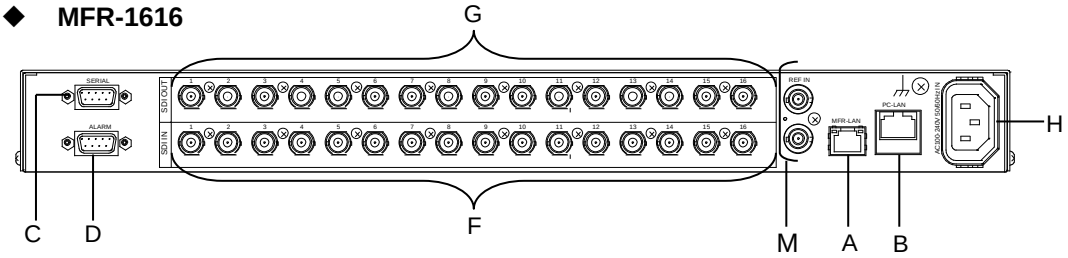

◆ **MFR-1616R**

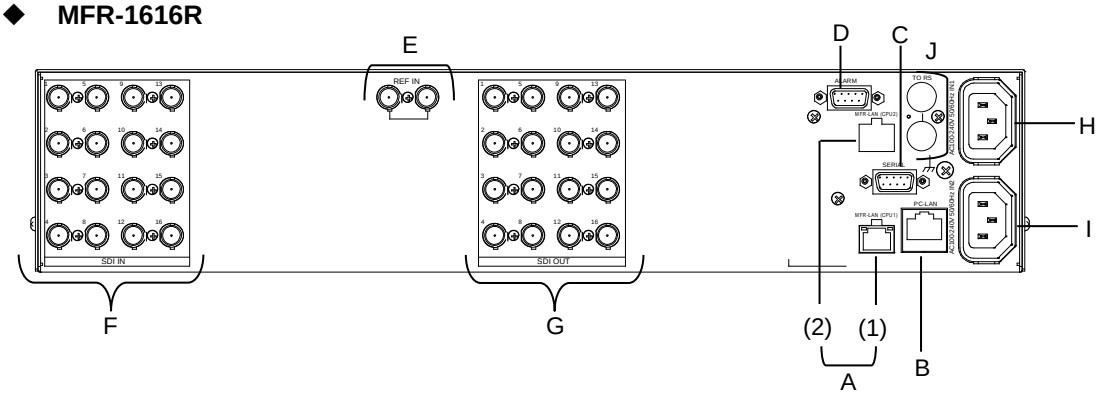

◆ **MFR-3216RPS**

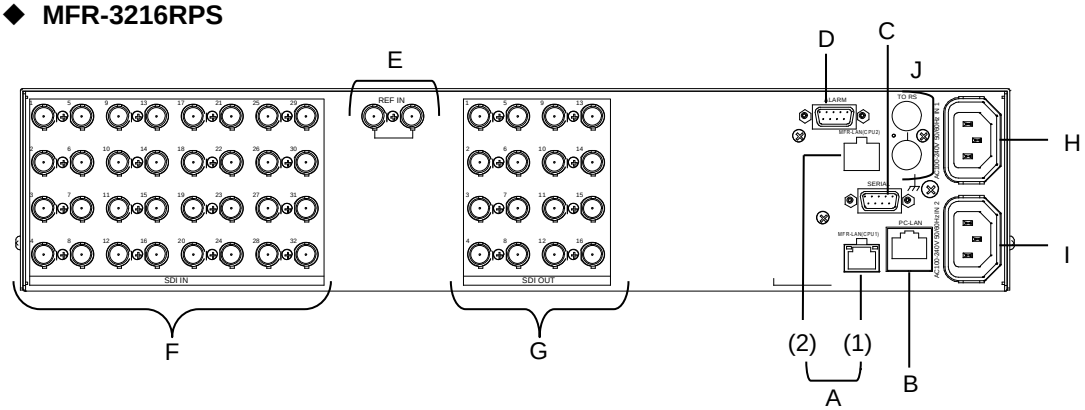

◆ **MFR-3232RPS**

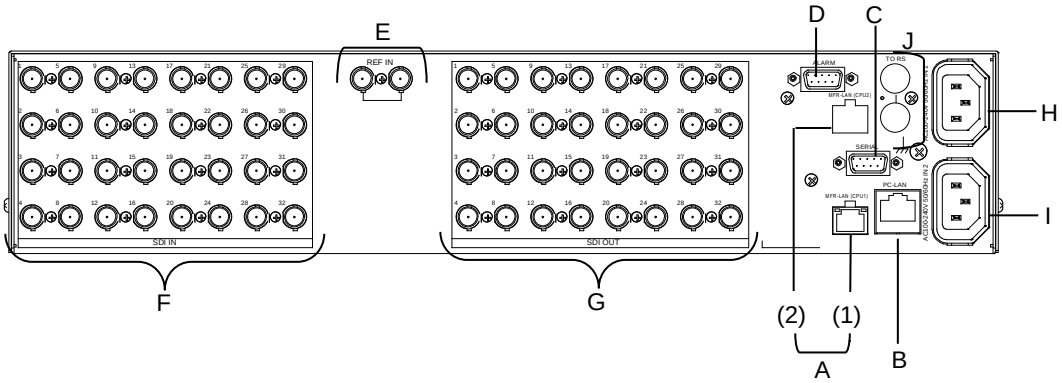

◆ **MFR-1616A**

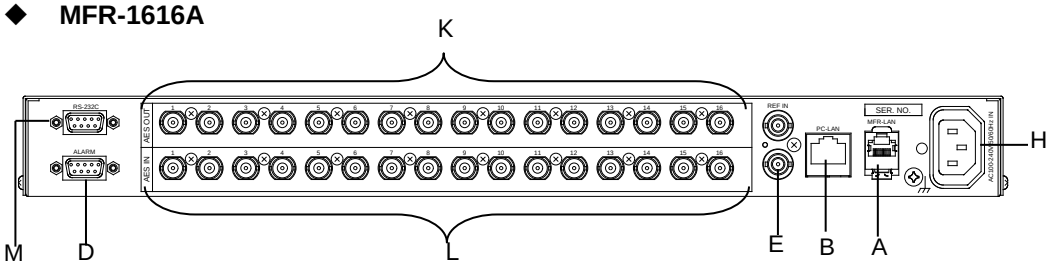

No.	Name	Description
A	MFR-LAN *1 (1) MFR-LAN (CPU1) *1 (2) MFR-LAN (CPU2) *1	Ethernet ports for connection to MFR Remote Control Units and MFR-GPI. An Ethernet port (10/100BASE-T RJ-45) (1) for the MAIN CARD (2) for the MFR-SRCPU (option)
B	PC-LAN *1	Used to connect to a PC or other external unit. An Ethernet port (10/100BASE-TX RJ-45)
C	SERIAL *2	Used to control via a serial interface (RS-232C/RS-422 selectable)
D	ALARM	Used for alarm output
E	REF IN	Used to input a reference signal (BB or Tri-level sync signal) (looping, or 75 ohm terminated)
F	SDI IN	Used to input digital component video signals
G	SDI OUT	Used to input digital component video signals
H	AC IN1	Used to connect Power Supply Unit 1 to an AC power source
I	AC IN2	Used to connect Power Supply Unit 2 (optional) to an AC power source.
J	TO RS	Unused
K	AES OUT	Used to output AES/EBU audio signals.
L	AES IN	Used to input AES/EBU audio signals.
M	RS-232C	Used to control via RS-232C.

*1 The MFR-LAN/MFR-LAN(CPU1, 2) connector may be labeled as TO RU, and the PC-LAN connector as TO PC on units shipped before Sep. 16, 2011.

*2 The SERIAL connector is set to RS-232C as factory default. Consult your FOR-A reseller if you wish to change the setting.

IMPORTANT

The MFR-LAN/MFR-LAN (CPU1, 2) ports must be connected to a LAN to enable operation. The LAN connections for MFR Series devices must be separated from the network segment of other devices. Do not use the spanning tree or other functions that inhibit or restrict communication in MFR-LAN.

◆ **When Installing MFR-SRCPU**

Installing the MFR-SRCPU card enables MFR-1616R / 3216RPS / 3232RPS units to have redundant CPU cards and Ethernet ports, which can be used for remote control panel connection.

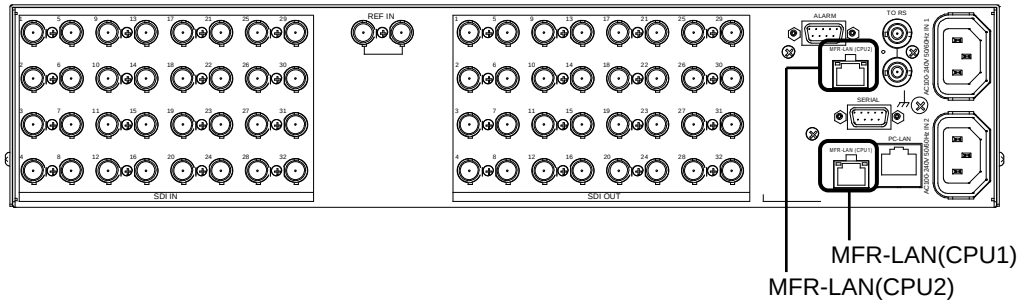

IMPORTANT

When using the MFR-SRCPU, be sure to connect both MFR-LAN(CPU1) and MFR-LAN(CPU2) connectors to a LAN interface.

See the separate MFR SERIES Web-based Control User Manual for more information on MFR-SRCPU.

2-1-3. Interfaces

◆ **SERIAL Connector (9-pin D-sub, male)**

RS-232C or 422 interface is selectable. The factory default setting is RS-232C. Consult your FOR-A reseller if you wish to change the setting.

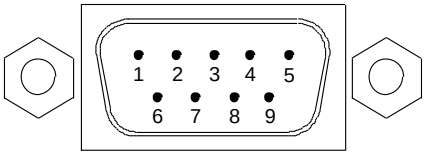

RS-232C Connector Pin Assignments

Pin No.	Signal Name	Description
1	NC	Not used
2	RxD	Received Data
3	TxD	Transmitted Data
4	DTR	Data Terminal Ready
	NC	Not used (MFR-1616A only)
5	SG	Signal Ground
6	DSR	Data Set Ready
	NC	Not used(MFR-1616A only)
7	RTS	Request To Send
8	CTS	Clear To Send
9	NC	Not used

* The maximum cable length is 10 m.

* DTR/DSR and RTS/CTS are internally connected respectively.

RS-422 connector pin assignment (9-pin, D-sub male)

Pin No.	Signal Name	Description
1	FG	Frame Ground
2	T-	Transmit data (-)
3	R+	Receive data (+)
4	SG	Signal Ground
5	NC	Not used
6	SG	Signal Ground
7	T+	Transmit data (+)
8	R-	Receive data (-)
9	FG	Frame Ground

* The maximum cable length is 100 m.

◆ **ALARM Connector (9-pin D-sub, female)**

Alarm 1 Output:

Under normal operation:	Pins 1 and 6 are open.
In a malfunction or power-off state:	Pins 1 and 6 are closed.

Alarm 2 Output:

Under normal operation:	Pins 2 and 7 are open.
In a malfunction or power-off state:	Pins 2 and 7 are closed.

Reset:
To reset the unit externally, short Pin 5 and a signal ground pin (8 or 9).

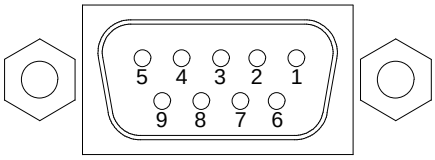

9-pin D-sub, female

ALARM Connector Pin Assignments

Pin No.	Signal Name	Description
1	ALARM1 OUT	Alarm 1 output (Default : FAN) (Default: POWER on MFR-1616A)
2	ALARM2 OUT	Alarm 2 output (Default: POWER) (Default: XPT ERROR on MFR-1616A)
3	NC	Not used
4	NC	Not used
5	RESET IN	Reset in, active low
6	ALARM1 COMMON	Alarm 1 output, Common
7	ALARM2 COMMON	Alarm 2 output, Common
8	GND	Signal ground
9	GND	Signal ground

The following items can be set for ALARM1 OUT and ALARM2 OUT. The alarms can be assigned in the Web-Based Control.

Available alarm signals vary depending on the Main unit model

Alarm signals	3232RPS	3216RPS	1616R	1616	1616A
Fan	Available	Available	Available	Available	---
Power	Available	Available	Available	Available	Available
Secondary CPU Error	Available	Available	Available	---	---
CPU Changeover (issued when the secondary CPU is activated to change over the operation)	Available	Available	Available	---	---
Crosspoint Error	Available	Available	Available	Available	Available

2-1-4. RS-232C / RS-422 Selection

IMPORTANT

Be sure to consult your FOR-A reseller when you wish to change the RS-232C setting to RS-422.

CAUTION	Do not access internal cards with the unit power ON. Always power OFF all connected units / disconnect power cords prior to accessing the interior. Adjustment and maintenance procedures that require accessing the unit interior should only be performed by qualified technical personnel familiar with the equipment.

◆ **MFR-1616**

(1) Remove the 6 screws as shown below from both sides of the unit, slide the top panel toward the back of the unit, and detach the panel from the unit.

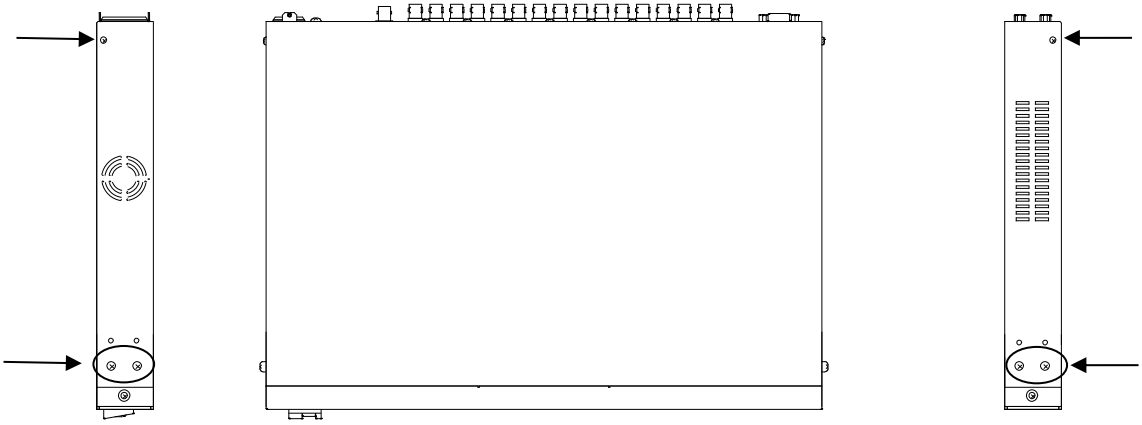

(2) Change DIP switch settings with tweezers through the opening on the right side.

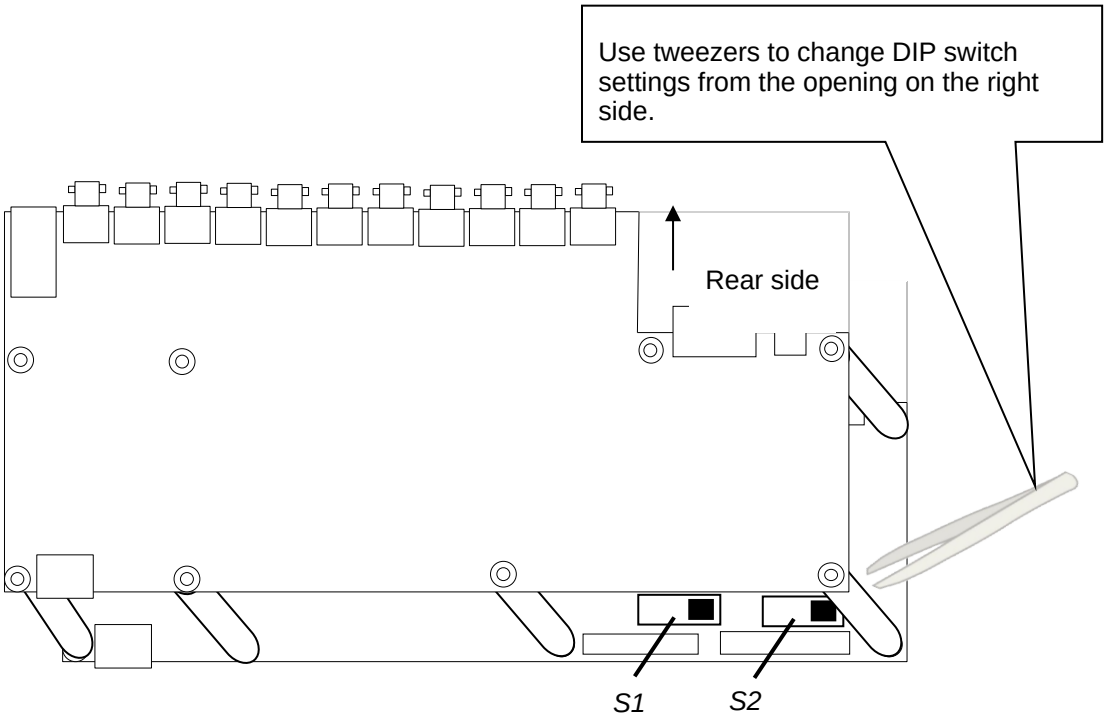

Default DIP switch settings are as shown below.

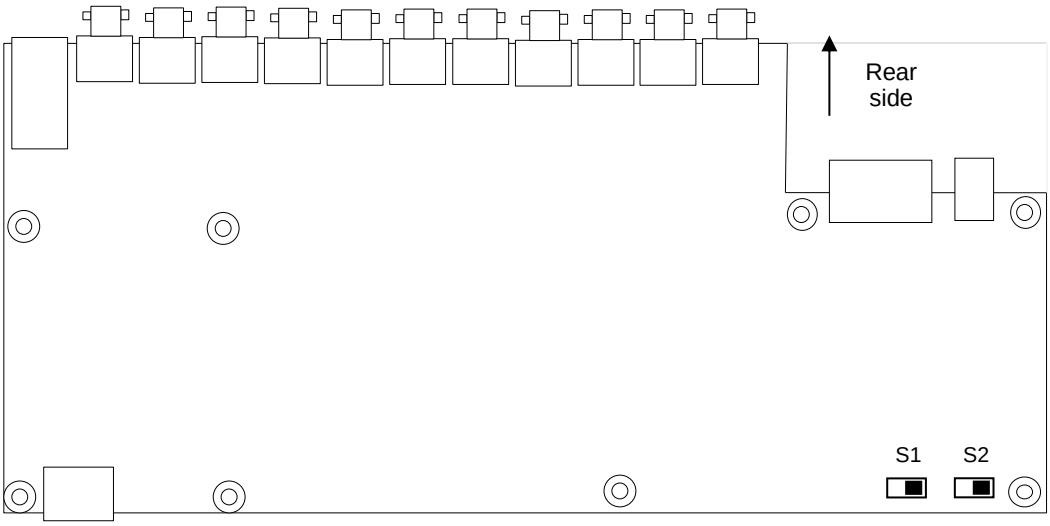

◆ **DIP switch settings**

Switch	Description			
S1, S2	Used to select RS-232C/RS-422. To change the selection, refer to the setting position figures on the right. Be sure to change both switch positions so that they match the selected settings.	Switch settings	RS-232C (Factory default)	
			RS-422	

IMPORTANT

S3 and S4 are for maintenance only. Do not change their settings.

◆ **MFR-1616R / MFR-3216RPS / MFR-3232RPS**

(1) For **MFR-1616R** units, remove the 6 screws as shown below from both sides of a unit, slide the top panel toward the back of the unit, and detach the panel from the unit.
For **MFR-3216RPS and MFR-3232RPS** units, remove the 6 screws as shown below from both sides and one screw from the top panel of a unit, slide the top panel toward the back of the unit, and detach the panel from the unit.

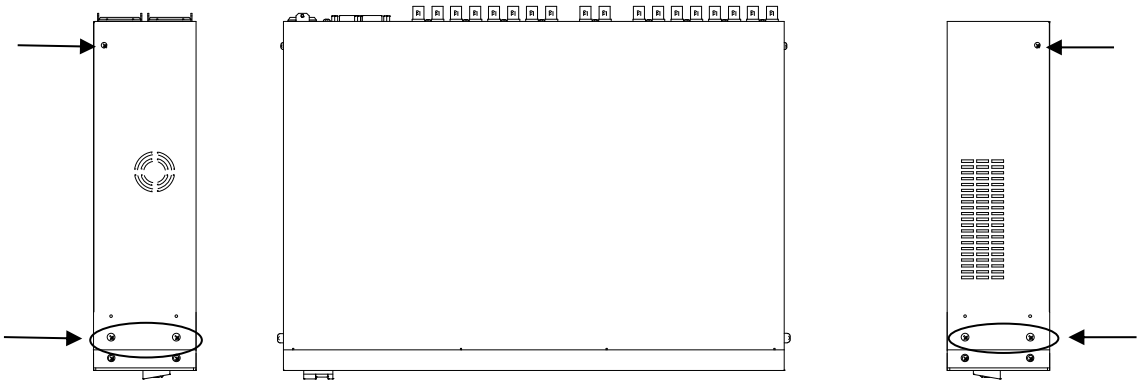

(2) Change the DIP switch settings. Default DIP switch settings on the main card are as shown below.

◆ **DIP switch settings**

Switch	Description			
S1, S2	Used to select RS-232C/RS-422. To change the selection, refer to the setting position figures on the right. Be sure to change both switch positions so that they match the selected settings.	Switch settings	RS-232C (Factory default)	
			RS-422	

IMPORTANT

S3 and S4 are for maintenance only. Do not change their settings.

◆ **MFR-1616A**

IMPORTANT

The serial interface on MFR-1616A is fixed to RS-232C and cannot be changed.

2-2. MFR-GPI

2-2-1. Front Panel

No.	Item	Description
A	POWER	Displays the power status. ▶ See the table below for details on indications.
B	BUSY	Displays the writing status of the flash memory for backup settings. ▶ See the table below for details on indications.
C	GPI	When the GPI function is assigned using Web-based Control, the LED lights green. The LED remains unlit when there is no assignment.
D	SERIAL 1-4	When serial ports are assigned using Web-based Control, the LED lights green. The LED remains unlit when there is no assignment.
E	RESET	Used to re-initialize the GPI unit.

◆ **Color indications on the MFR-GPI front panel**

LED \ LED Color	Green	Red	Orange
POWER	Normal	Power alarm	
BUSY	Normal processing		Writing to flash memory

* POWER LED lights up red if the unit is turned on while it is not connected to a network.

NOTE

After finishing settings, do **not power OFF** the unit while BUSY LED is **lit orange**, since the system is writing to Flash. (It takes about two minutes at max.)

2-2-2. Rear Panel

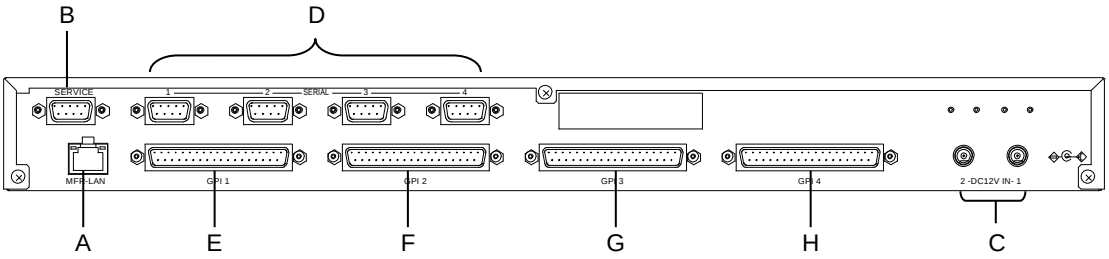

No.	Item	Description
A	MFR-LAN *1	Used to connect the MFR main unit Ethernet port (10/100BASE-TX, RJ-45)
B	SERVICE	Used for maintenance only. Do not use.
C	DC12V IN 1 and 2	Used to supply 12 V DC power.
D	SERIAL 1 to 4	Used for control via a serial interface. The default setting is RS-232C. RS-422 is also selectable using switches on the card. (See section 2-2-4. Switch Settings on the Internal Board.) Pin assignments are the same as those of the MFR main unit. (See section 2-1-3. “Interfaces.")
E	GPI 1 (Port no.: 1)	Used for GPI input / output connections. (32 total assignable inputs and outputs)
F	GPI 2 (Port no.: 2)	Used for GPI input / output connections. (32 total assignable inputs and outputs)
G	GPI 3 (Port no.: 3)	Used for GPI input / output connections. (32 total assignable inputs and outputs)
H	GPI 4 (Port no.: 4)	Used for GPI input / output connections. (32 total assignable inputs and outputs)

*1 The MFR-LAN connector may be labeled 10/100BASE-T on the previous model.

2-2-3. Interfaces (MFR-GPI)

◆ **GPI IN / TALLY OUT Connector (37-pin D-sub, female)**

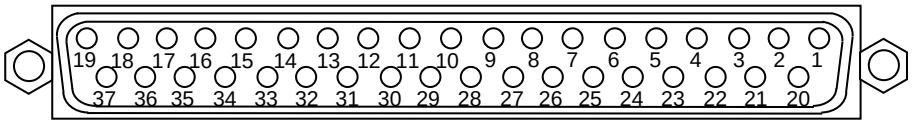

Pin No.	Signal	Pin No.	Signal
1	GPI_IN / TALLY_OUT# - 01	20	GPI_IN / TALLY_OUT# - 20
2	GPI_IN / TALLY_OUT# - 02	21	GPI_IN / TALLY_OUT# - 21
3	GPI_IN / TALLY_OUT# - 03	22	GPI_IN / TALLY_OUT# - 22
4	GPI_IN / TALLY_OUT# - 04	23	GPI_IN / TALLY_OUT# - 23
5	GPI_IN / TALLY_OUT# - 05	24	GPI_IN / TALLY_OUT# - 24
6	GPI_IN / TALLY_OUT# - 06	25	GPI_IN / TALLY_OUT# - 25
7	GPI_IN / TALLY_OUT# - 07	26	GPI_IN / TALLY_OUT# - 26
8	GPI_IN / TALLY_OUT# - 08	27	GPI_IN / TALLY_OUT# - 27
9	GPI_IN / TALLY_OUT# - 09	28	GPI_IN / TALLY_OUT# - 28
10	GPI_IN / TALLY_OUT# - 10	29	GPI_IN / TALLY_OUT# - 29
11	GPI_IN / TALLY_OUT# - 11	30	GPI_IN / TALLY_OUT# - 30
12	GPI_IN / TALLY_OUT# - 12	31	GPI_IN / TALLY_OUT# - 31
13	GPI_IN / TALLY_OUT# - 13	32	GPI_IN / TALLY_OUT# - 32
14	GPI_IN / TALLY_OUT# - 14	33	Frame ground
15	GPI_IN / TALLY_OUT# - 15	34	Frame ground
16	GPI_IN / TALLY_OUT# - 16	35	Frame ground
17	GPI_IN / TALLY_OUT# - 17	36	+4.8V output
18	GPI_IN / TALLY_OUT# - 18	37	+4.8V output
19	GPI_IN / TALLY_OUT# - 19		

* The symbol "#" at the end of signals represents the port number (1, 2, 3 or 4).
* The maximum total output current for all +4.8 V outputs is 1.5 A.
* The GPI input pulse width should be 54 ms or more.

◆ **GPI IN Circuits**

Switch or relay

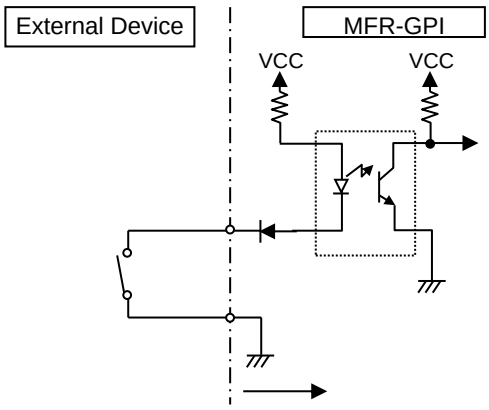

Open collector

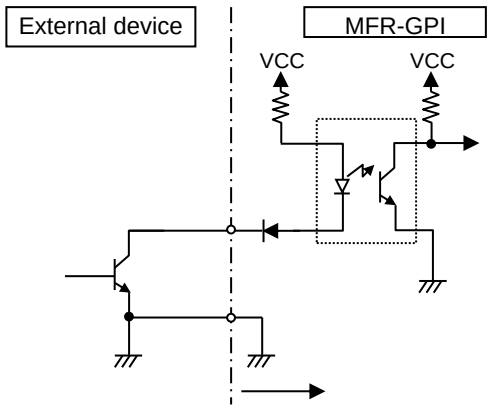

◆ **GPI OUT / TALLY OUT Circuit**

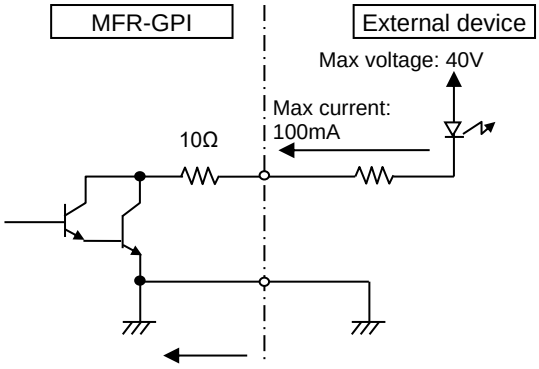

* The voltage is about 0.9 V when turned-on.

2-2-4. Switches on the Card

CAUTION	Do not access internal cards or make connections with the unit powered ON. Always power OFF all connected units / disconnect power cords prior to accessing the interior. Further note that adjustments and maintenance should only be performed by qualified technical personnel familiar with FOR-A equipment.

Remove two screws on both sides of the MFR-GPI to access the internal card as shown below. The figure below shows the factory default switch settings.

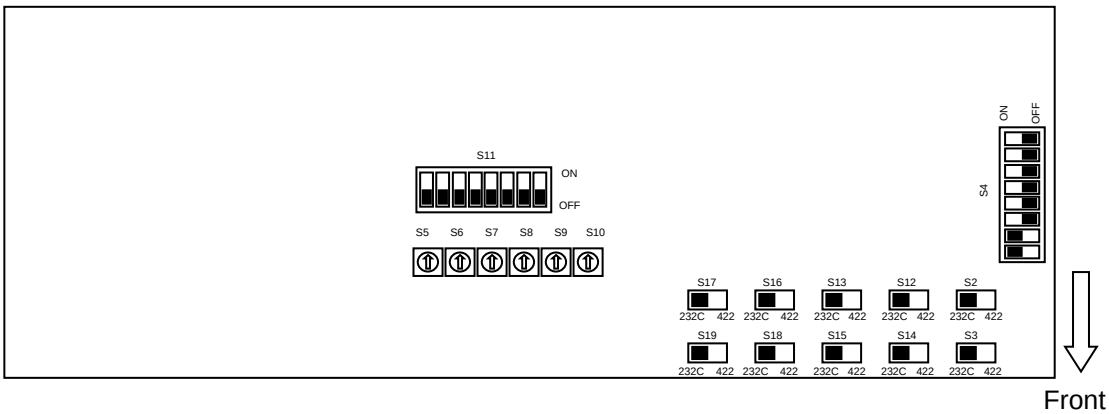

Switch	Function / Settings			
S2, S3	Used for maintenance. Do not use.			
S4	Used for maintenance. Do not use. (The factory default setting is as shown at right. The black boxes (■) represent switches.)	ON OFF		
S5,S6,S7, S8,S9,S10	Used for maintenance. Do not use.			
S11	Used for maintenance. Do not use.	ON OFF		
S12, S14	Used to select RS-232C/RS-422 for SERIAL 1. Default setting is RS-232C (both switches to the left). To change to RS-422, set both switches to the right.	Switch Settings	RS-232C (Factory default setting)	
S13, S15	Used to select RS-232C/RS-422 for SERIAL 2. Default setting is RS-232C (both switches to the left). To change to RS-422, set both switches to the right.			
S16, S18	Used to select RS-232C/RS-422 for SERIAL 3. Default setting is RS-232C (both switches to the left). To change to RS-422, set both switches to the right.		RS-422	
S17, S19	Used to select RS-232C/RS-422 for SERIAL 4. Default setting is RS-232C (both switches to the left). To change to RS-422, set both switches to the right.			

2-3. MFR-TALM

2-3-1. Front Panel

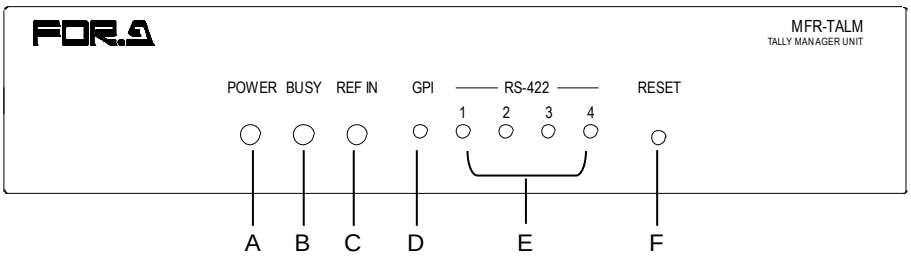

No.	Item	Description
A	POWER	Displays the power status. ▶ See the table below for details on indications.
B	BUSY	Displays the writing status of the flash memory for backup settings. ▶ See the table below for details on indications.
C	REF IN	Lights green when an external reference signal is present.
D	GPI	Lights green a GPI function is assigned. Turns off when no GPI function is assigned.
E	RS-422 1 - 4	Lights green when a port function is assigned. Turns off when no port function is assigned.
F	RESET	Resets MFR-TALM.

◆ **Color indications on the MFR-TALR front panel**

LED color / LED	Green	Red	Orange
POWER	Normal	Power alarm	
BUSY	Normal processing		Writing to flash memory

NOTE

After finishing settings, do **not power OFF** the unit while BUSY LED is **lit orange**, since the system is writing to Flash. (It takes about two minutes at max.)

2-3-2. Rear Panel

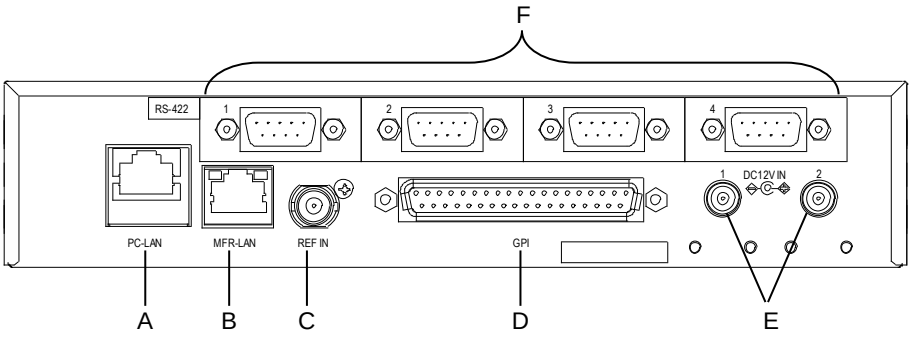

No.	Name	Description
A	PC-LAN	Ethernet port for connection to PC or other external unit (10/100BASE-TX, RJ-45)
B	MFR-LAN	Ethernet port for connection to MFR main unit (10/100/1000BASE-T, RJ-45)
C	REF IN	Used to input a reference signal (BB or Tri-level sync signal)
D	GPI	Used to input/output GPI signals for external control. (32 total assignable inputs and outputs) Pin assignments are the same as those of the MFR-GPI connectors. ▶See section 2-2-3 "Interfaces (MFR-GPI)."
E	DC12V IN 1 and 2	Used to supply 12 V DC power.
F	RS-422 1-4	Used for control via an RS-422 interface. Pin assignments are the same as those of the MFR main unit. ▶See section 2-1-3. “Interfaces."

3. System Configuration Example

3-1. Basic Configuration

The block diagram below shows an example of the basic MFR routing system that consists of an MFR Main Unit, Remote Unit and the Web-based Control accessed from a computer.
Make sure to connect both MFR-LANs (CPU1) and (CPU2) to a LAN respectively for CPU redundancy. Their LAN connections must be separated from the network segment of PC-LAN and other devices. (Default IP addresses (Net mask: 255.255.255.0) are used in the configuration example below.)

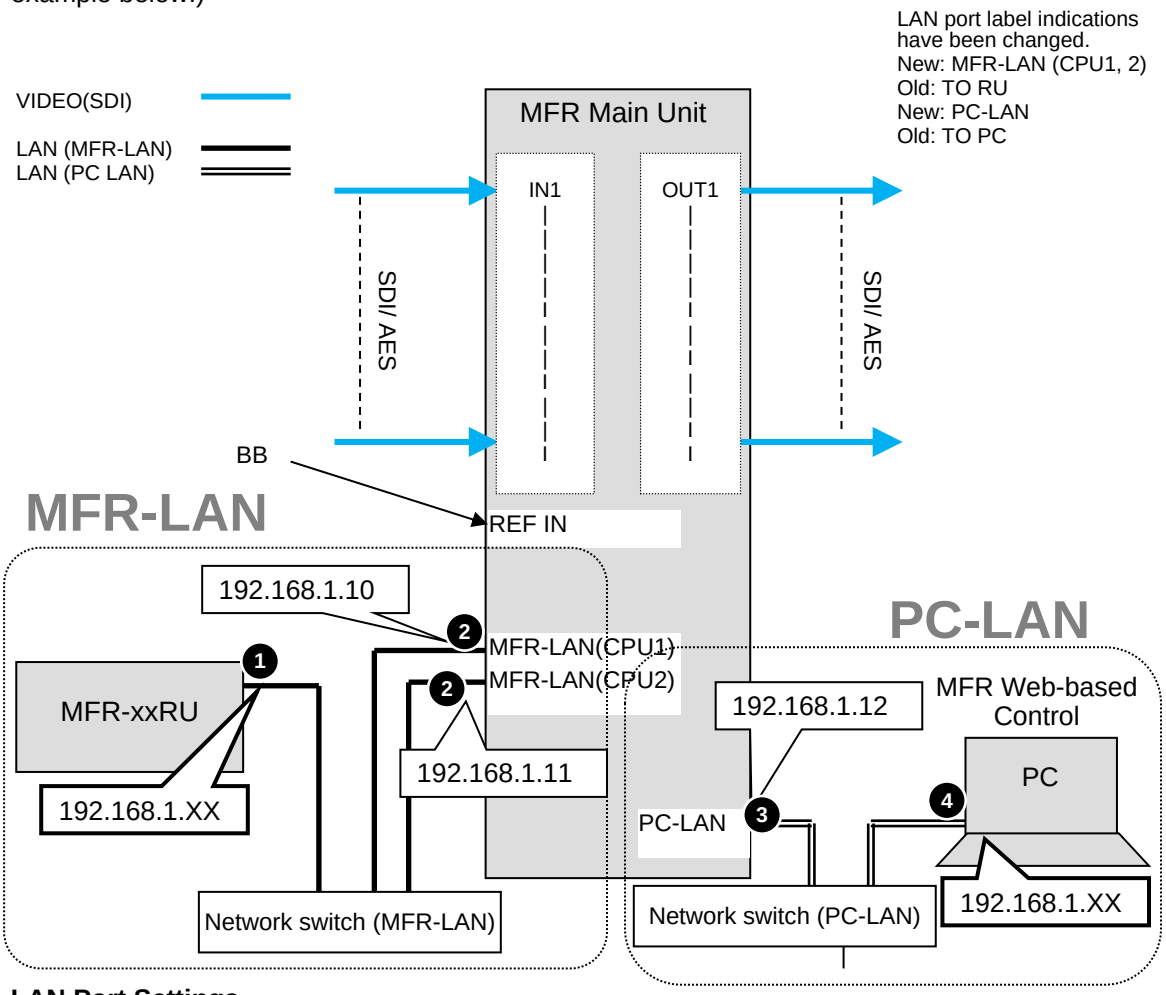

LAN Port Settings

Port	RU Front Panel (Sec. in MFR-RU Series User Manual)	Web-based Control
❶	MFR-39RUA: "Setting Mode Menu (MFR-39RUA)" MFR-39RU: "Setup Menu (MFR-39RU)" MFR-18RU/18RUA: "Setup Menu (MFR-18RU/18RUA)" MFR-16RUTA: "Setup Menu (MFR-16RUTA)" MFR-8RUA: "Setup Menu (MFR-8RUA)" Other RUs: "Setup Menu (MFR-16/40RU/16RUD/ MFR-16/32/64RUW)"	**RU Settings** page
❷	---	**MU Settings** page
❸	MFR-39RUA: "Setting Mode Menu (MFR-39RUA)" (Display only) MFR-39RU: "Setup Menu (MFR-39RU)" (Display only) MFR-18RU/18RUA: "Setup Menu (MFR-18RU/18RUA)" (Display only) MFR-16RUTA: "Setup Menu (MFR-16RUTA)" (Display only) MFR-8RUA: "Setup Menu (MFR-8RUA)" (Display only) Other RUs: "Setup Menu (MFR-16RU/40RU/16RUD/ MFR-16/32/64RUW)"(Display only)	**Network Settings** page

3-2. Main Unit Linking

The Main Unit Link feature allows you to control multiple main units at the same time.
Two types of system configurations are available:

Parallel Link:	Simultaneous control of several main units.
Expanded Matrix:	Creates an expanded virtual matrix by linking main units.

Note that each Expanded Matrix system requires specific BNC connections. **IP port and SNMP settings** should be performed on **each** main unit. After these settings are completed, all linked main units are set and **controlled** together on the main unit that is specified as **Master**.

Main Unit Link Specifications

- Main Unit Link systems are set and controlled through a specified **master** unit.
- Up to **8** main units can be linked within a system.
- **MFR-8000 / 5000 / 3000** and other MFR main units (**MFR-3232RPS / 3216RPS / 1616 / 1616R / 1616A /**) can**not** be linked to each other.
- Only **SDI** signals can be routed in **Expanded Matrix** systems. (MFR-1616A units, therefore, cannot be linked in an Expanded Matrix system.)
- All main units in a link system must be linked together and independent units cannot exist in the system.
- Refer to Firmware / Software Versions and Supported Hardware / Features (p. 3) for details on the supported version.

3-2-1. Parallel Link System Example

The system example below shows video and audio links using a Parallel Link system composed of MFR-1616 and MFR-1616A units.

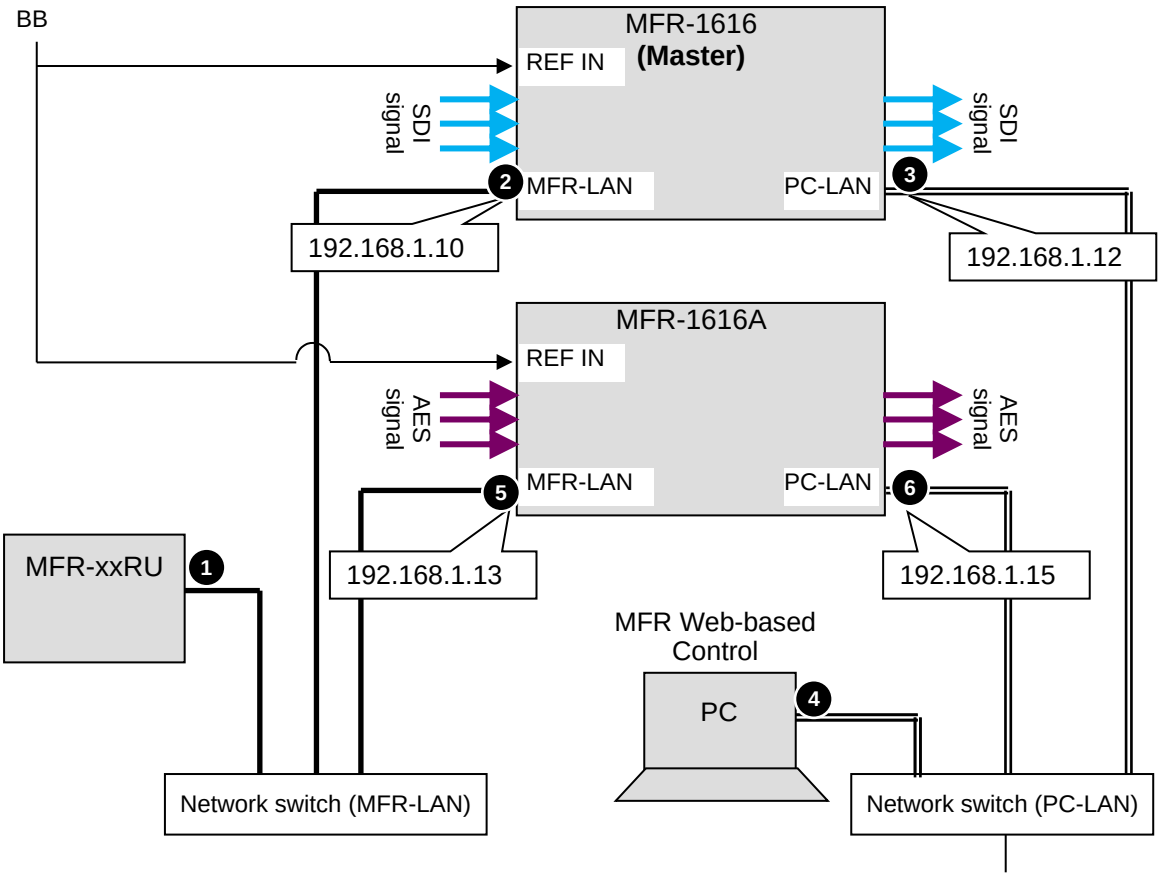

Note that in all main units the IP address of MFR-LAN1 is set to 192.168.1.10 and that of PC-LAN to 192.168.1.12 as factory default. To prevent IP address overlap in a system, you need to change IP addresses of either unit.

Also note that desired IP addresses can be set for system devices according to your network conditions.

◆ **Setup Procedure**

1) Connect all devices in the MFR system as shown in the figure in the previous page.
2) Power on the MFR-1616, Remote Control unit and computer. (Do not power on the MFR-1616A.) Set the IP address for the Remote Control Unit (①) and computer (④). Power off the MFR-1616.
3) Power on the MFR-1616A. Set the MFR-1616A IP addresses (⑤ and ⑥) as shown in the previous page. Set the **Switching Point** to **Sync** in the same menu page.
4) Power on the MFR-1616.
5) Connect to the MFR-1616 Web-based control and open the **Build Setting** page. Check on **Build Enable** to enable the Main Unit Link feature.

▶ See section 12 "Main Unit Link" in the "Web-based Control User Manual."

3-2-2. Expanded Matrix System Example

The system example below connects three MFR-3232RPS units to form a 64 x 16 virtual matrix.

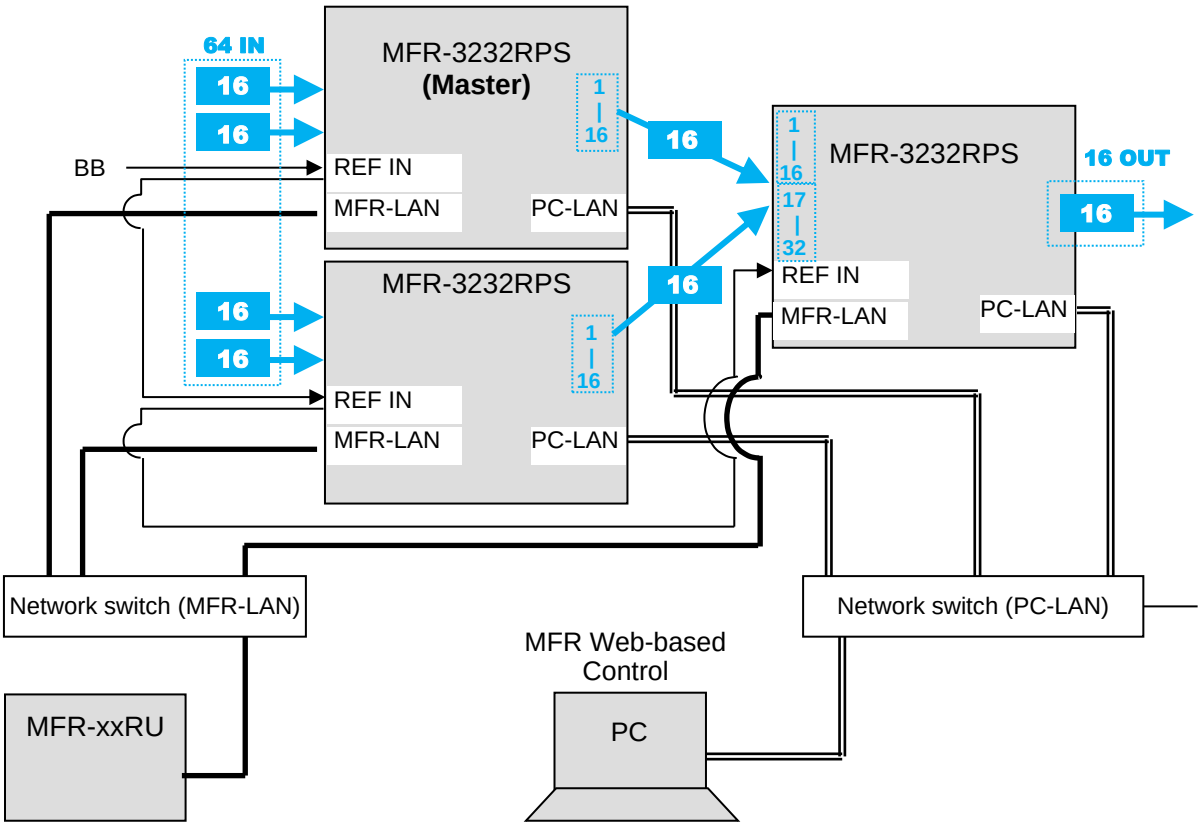

◆ **Setup Procedure**

1) Connect three MFR-3232RPS units, one by one, to the MFR system, referring to the previous chapter for details on to setting network settings. Do not use the same IP address twice in the system.
2) Connect all three MFR-3232RPS units to the MFR system. Connect BNC cables based on SDI signal routing paths.
3) Connect to the Web-based Control of an MFR-3232RPS and open the **Build Setting** page. Check on **Build Enable** to enable the Main Unit Link feature.

▶ See "Main Unit Link" in the "Web-based Control User Manual."

3-3. Signal Name and Tally Link System

3-3-1. Standard Configuration

The block diagram below shows a basic signal name and tally link system.

> To configure this system, connect the SERIAL port on an MFR main unit or SERIAL 1 to 4 on an MFR-GPI unit to the video switcher's serial port. RS-422 ports are required for the signal name and tally link system. Before connection, change the MFR serial ports from RS-232C to RS-422 using the internal switches.
> ▶See section 2-2-4. "Switches on the Card."

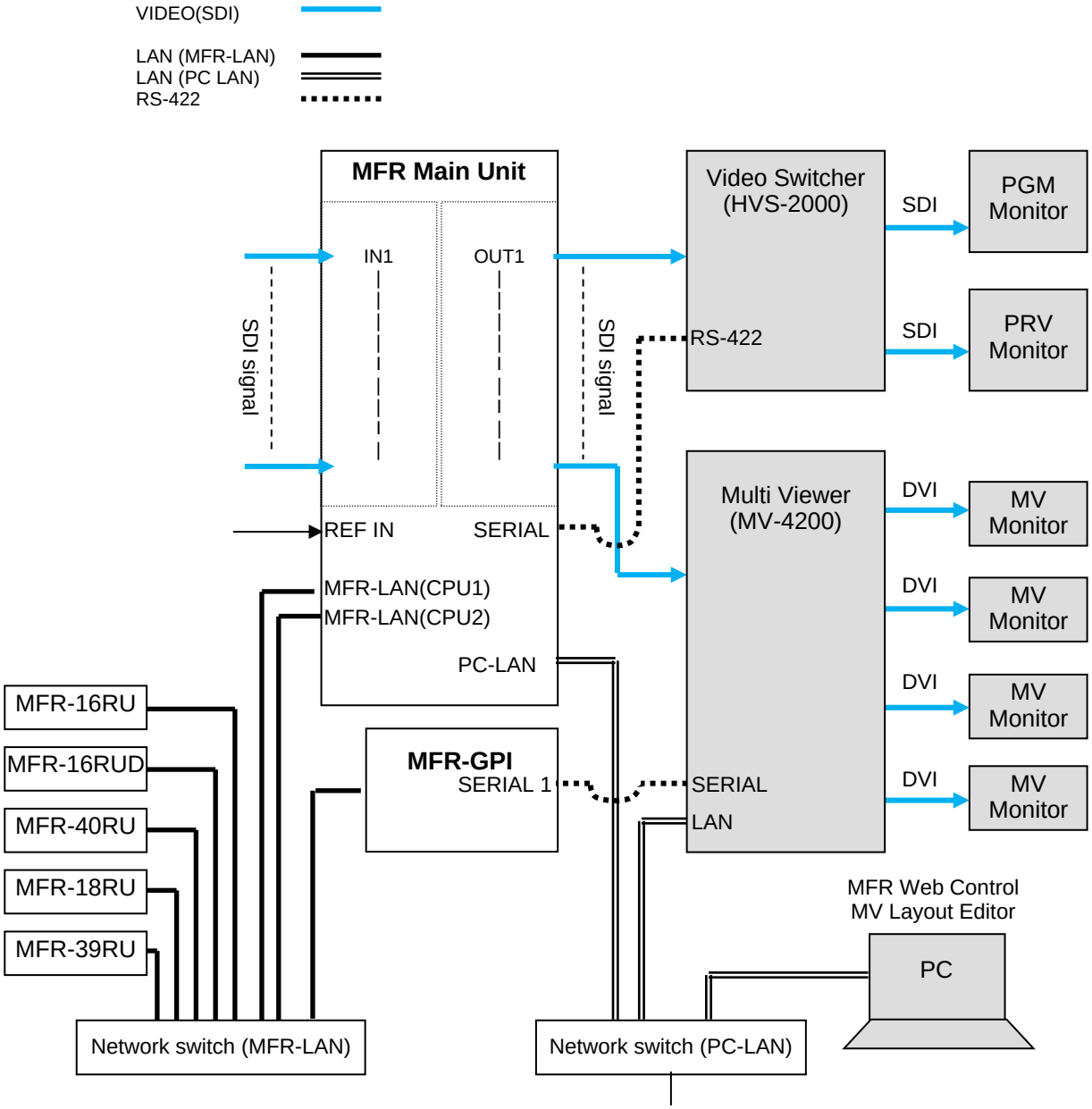

◆ Transmitting Signal Name and Tally Data

The figure below shows the routing of signal name and tally data.

> Set each serial port following the table on this page using the MFR Web Control and on the switcher.
> Each tally information setting should be performed in the [Web-based Control: **Tally System Settings** page].

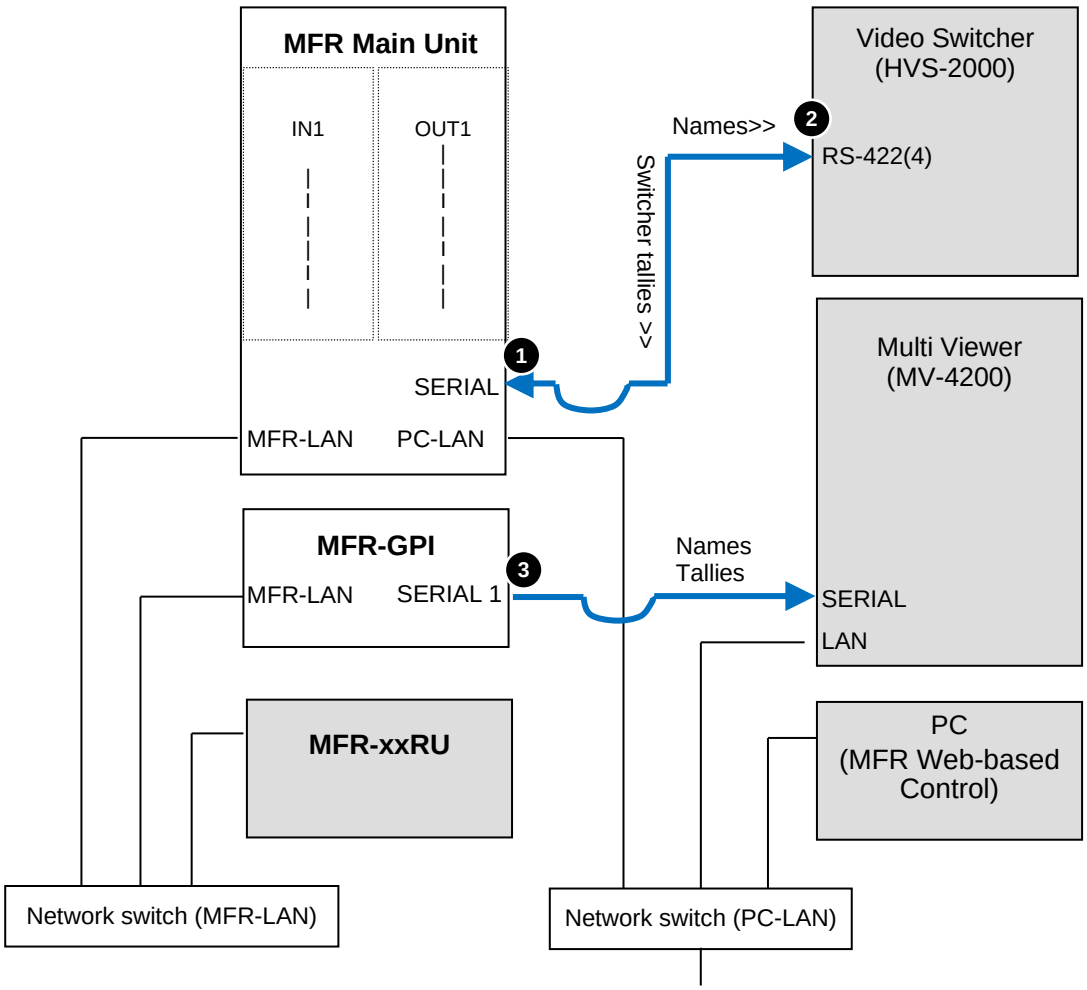

Serial Port Settings

Port	Menu	[Port Settings] - [Serial Port]			
		Connector	Function	Baud rate	Parity
❶	Web-based Control [Router System Settings]	(MU) -	Router/HVS connection	38400	NONE
❷	HVS-2000 [SETUP - SYSTEM - RS-422]		ROUTER	38400	NONE
❸	Web-based Control [Router System Settings]	(GPI) No. 1	Tally out (TSL Ver. 3.1)	38400	EVEN

Other Parameter Setting (in HVS-2000)

To receive source names from the router, set [LINK] in the ROUTER NAME menu to [MFR].

3-3-2. If Configuring an MFR-TALM

The block diagram below shows an example signal name and tally link system comprised of a FOR-A video switcher and multiviewer using an MFR-TALM unit. The MFR-TALM is specifically designed to perform the task of tally data computation, which is ordinarily undertaken by the MFR main unit, to accelerate the computation. RS-422 ports (1) to (4) are available for video switcher connection.

> Before using an MFR-TALM unit for the system, change **Tally Control Unit** to **MFR-TALM** in the [Main unit Web-based Control: **MU Settings** page].

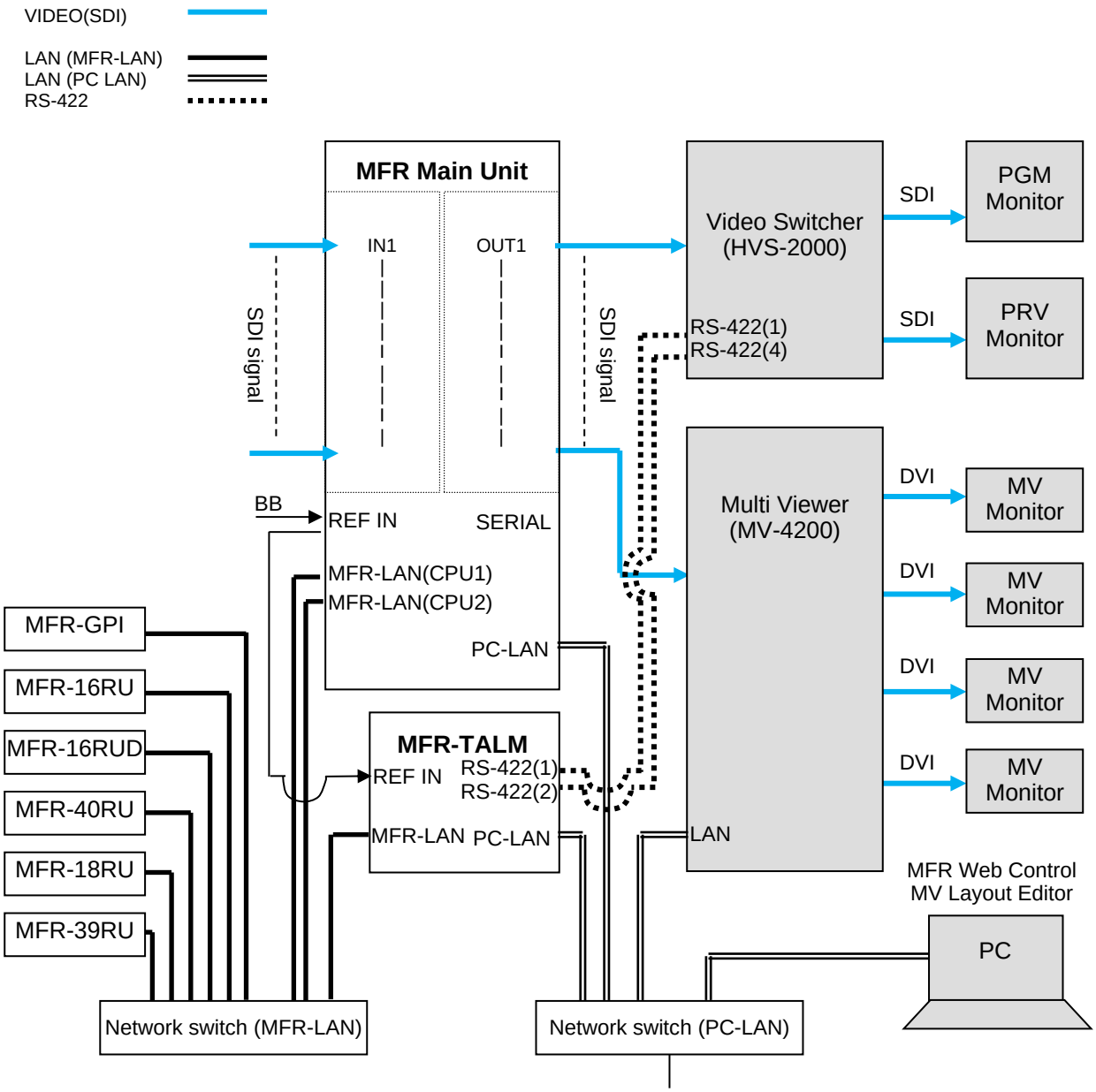

◆ **Transmitting Signal Name and Tally Data**

The figure below shows an example signal name and tally data routing system using the MFR-TALM.

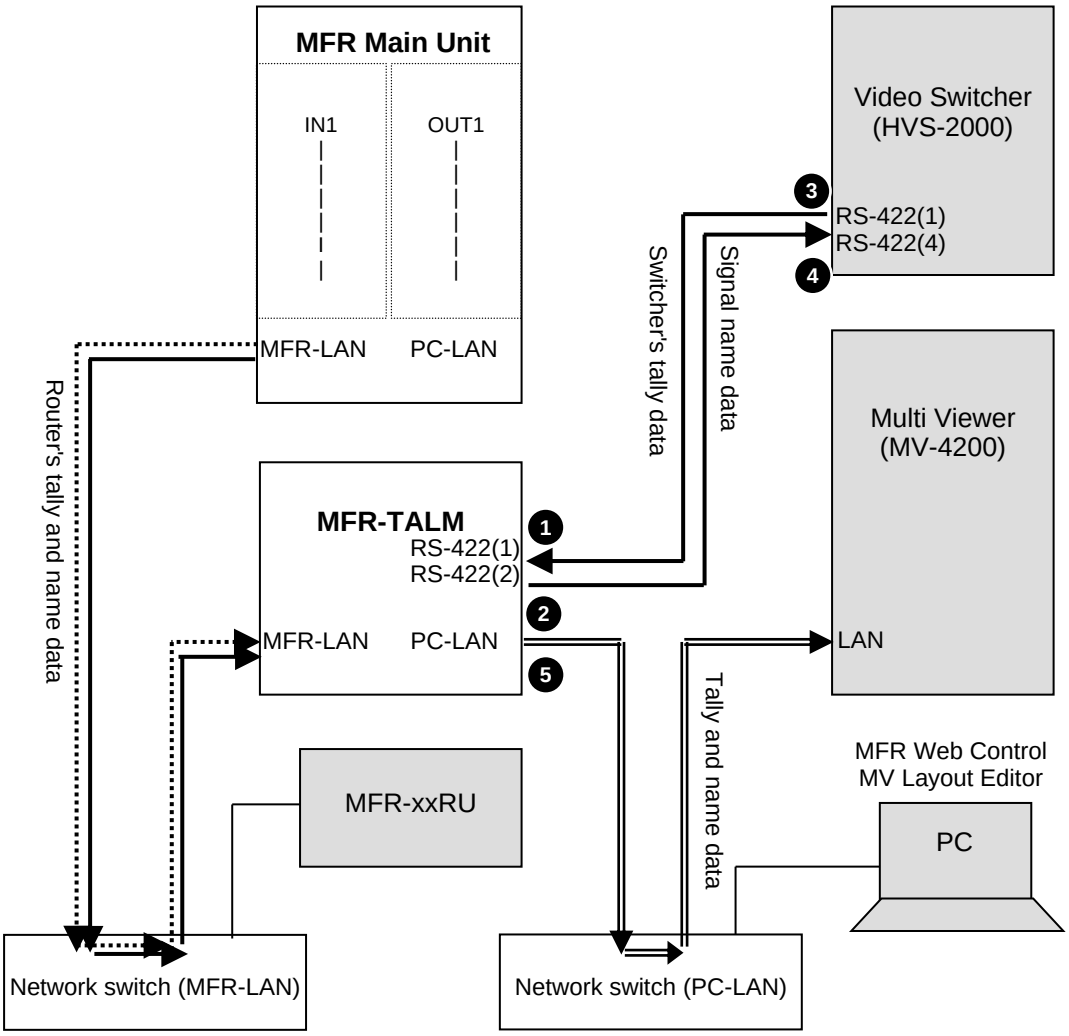

Each serial port should be set as shown in the table below in the relevant page of the **MFR-TALM** Web-based Control accessed from "**http://192.168.1.62**" (default IP address) on your web browser.

Serial Port Settings

Open the [MFR-TALM Web-based Control: **Port Settings** page] and perform port settings under **Serial Port**.

As for the HVS-2000 unit, perform port setting in the [SETUP - SYSTEM - RS-422] menu.

Port	Menu	[Port Settings] - [Serial Port]			
		Connector	Function	Baud rate	Parity
❶	Web-based Control [TALM Settings]	No. 1	HVS-TAL Protocol Reception	38400	EVEN
❷	Web-based Control [TALM Settings]	No. 2	Router/HVS connection	38400	NONE
❸	HVS-2000 [SETUP - SYSTEM - RS-422]	RS-422 (1)	TALLY	38400	EVEN
❹	HVS-2000 [SETUP - SYSTEM - RS-422]	RS-422 (2)	ROUTER	38400	NONE

TCP/IP Setting

Open the [MFR-TALM Web-based Control: **Port Settings** page] and perform port settings under **TCP/IP Port**.

Port	Menu	[Port Settings] - [TCP/IP Port]			
		Access Method	IP Address	Port	Function
❺	Web-based Control [TALM Settings]	Client	(MV IP address)	(MV TCP/IP port number)	TSL UMD protocol V5.0 Tally out

Encode	DLE	Screen No.	ID Range
ASCII / Unicode(Kanji) / Unicode(Import) (Select the character type to display.)	ON/OFF (Set the same as in MV.)	(Set the same as in MV.)	Select the TSL ID range to transmit to the MV.

Data transmission settings between HVS-2000 and MFR-TALM

<HVS-2000 side>

- To receive name data from the router, set **LINK** in the ROUTER NAME menu to **MFR.**
- Perform the TALLY COLOR and TALLY UNIT settings so that the MFR-TALM unit can receive switcher tally data.

<MFR-TALM side>

- Open the [MFR-TALM Web-based Control: **HVS-TAL Protocol Reception** page] and perform the same tally settings as those in HVS-2000.

The tally settings in the MFR system must be entered in the [MFR-TALM Web-based Control: **Tally System Settings** page]. When using MFR-TALM for tally control, the [Main unit Web-based Control: **Tally System Settings** page] and its subpages are all disabled.

Refer to your multiviewer's user guide for the details on how to handle tally data on the multiviewer.

4. Serial / LAN Command Control

Up to 20 external devices can be connected to an MFR Main Unit (including MFR-GPI serial ports) through LAN or serial interface.

4-1. Serial Interface

Crosspoint switchover and tally output can be controlled via the SERIAL ports on the MFR Series main unit or MFR-GPI.

4-2. LAN Interface

The MFR Series main unit is able to connect to a third-party automatic control system via the RJ-45 port (PC-LAN port). The TCP/IP communication protocol is supported. The control PC will be the Client, and the MFR Series main unit will be the Server.

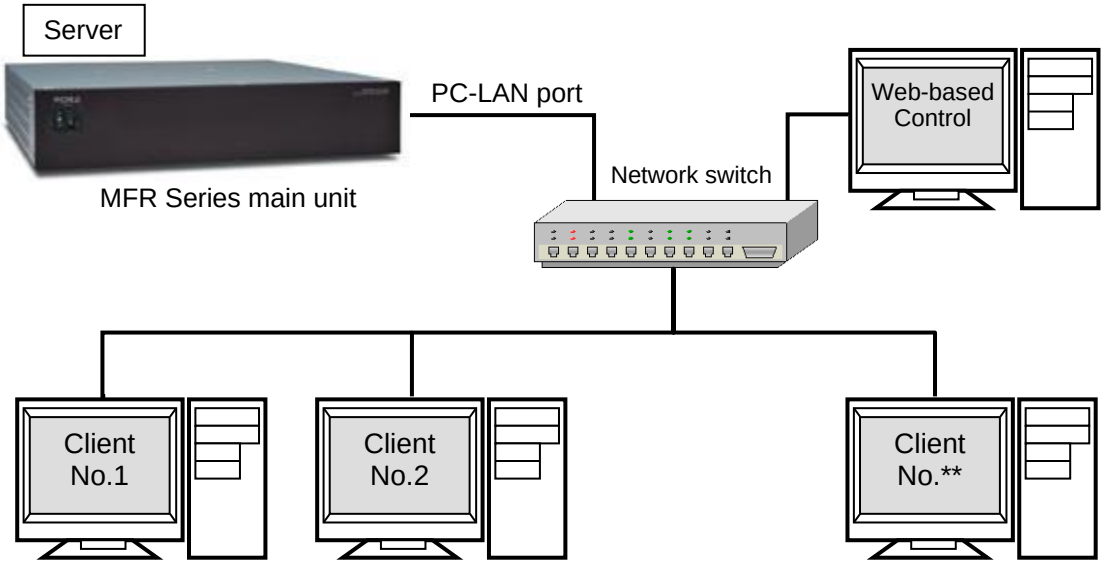

◆ **Basic specifications**

Item	Description
IP address (PC-LAN port)	Primary LAN (PC-LAN CPU1) default IP address: 192.168.1.12 Secondary LAN (PC-LAN CPU2) default IP address: 192.168.1.13 * (Subnet Mask: 255.255.255.0)
Port number	Setting range: 49152 to 65534 (Default: 23)
Number of PCs	Max. 16
Response / Resending	Wait before sending next command (Resend if the Echo is not returned.)
Login password	None
Communication protocol	TCP/IP, Control PC: Client, MFR and MFR main unit: Server Crosspoint Remote Control using ASCII code.
Command protocol	Crosspoint Remote Control protocol

* When a redundant CPU is configured, a client should connect to both LAN ports (PC-LAN CPU1 and PC-LAN CPU2) and send commands to the ports respectively. When the system functions normally, the secondary port (PC-LAN CPU2) do not respond to commands. But if an error occurs in the CPU1 system, the secondary port will take over the primary port and respond to commands.

4-3. Control Command

Although the protocols listed below support both serial and LAN connections, some commands can only be sent over a LAN.

◆ Control command list

	Function	Serial	LAN *1	Protocol *2
1	Commands (**S?**) for requesting the crosspoints list	Yes	Yes	Crosspoint remote control / Crosspoint remote control 2
2	Commands (**X?**) for requesting information on crosspoints (by specifying a destination and level.)	Yes	Yes	
3	Commands (**X:**) for switching over a crosspoint (single channel)	Yes	Yes	
4	Commands for switching over crosspoints (multi-channel simultaneous switchover)	Yes	Yes	
5	Commands (**W:**) for locking a destination	Yes	Yes	
6	Commands (**Z:**) for reinitializing a unit	Yes	–	
7	Commands (**K?**) for requesting input/output channel names	-	Yes	Crosspoint remote control 2
8	Commands (**A?**) for requesting CPU status.	-	Yes	
9	Commands (**W?**) for requesting Destination Lock status	-	Yes	
10	Commands (**K:**) for importing signal names	-	Yes	
11	Commands (**F?**) for requesting System Size	Yes	Yes	Crosspoint remote control / Crosspoint remote control 2
12	Commands for setting video format (reference and/or switching point).	-	Yes	Crosspoint remote control 2

*1 When commands are sent via LAN, an Echo, Prompt, S response and other response messages may be included in a single packet or divided into two or more packets. Therefore, do not process commands in a per packet basis but a per stream basis.

*2 A command protocol should be selected in the [Web-based Control: **Port Settings** page].

◆ Command formats

Func.	Control command	Command response	Ref.
1	@[sp]S?<Lvl>	S:<Lvl><Dest>,<Src>	-
2	@[sp]X?<Lvl><Dest>	S:<Lvl><Dest>,<Src>	-
3	@[sp]X:<Lvls>/<Dest>,<Src>	S:<Lvl><Dest>,<Src> C:<Lvls>/<Dest>,<Src>[…..[S<Salvo number>][L<Link number>]]:I<ID>	-
4	**Clear a preset crosspoint.** @[sp]B:C		-
	Preset a crosspoint. @[sp]P:<Lvl>/<Dest>,<Src>		
	Read a preset crosspoint specifying a level and destination. @[sp]P?**<**Lvl><Dest>	V:<Lvl><Dest>,<Src>	
	Read preset crosspoints for all channels in the specified level. @[sp]V?**<**Lvl>	V:<Lvl><Dest>,<Src>	
	Set preset crosspoints simultaneously. @[sp]B:E	S:<Lvl><Dest>,<Src> C:<Lvls>/<Dest>,<Src>[…..[S<Salvo number>][L<Link number>]]:I<ID>	-
5	**LOCK ALL units.** @[sp]W:<Lvl>/<Dest>,<ID>,1	W!<Lvl><Dest>,<ID>,1	-
	LOCK OTHER units. @[sp]W:<Lvl>/<Dest>,<ID>,2	W!<Lvl><Dest>,<ID>,2	-
	Disable LOCK. @[sp]W:<Lvl>/<Dest>,<ID>,0	W!<Lvl><Dest>,<ID>,0	-

6	@[sp]Z:<Lvls>		S:<Lvl><Dest>,<Src> C:<Lvls>/<Dest>,<Src>[…..[S<Number of crosspoints in Salvo>][L<Number of Links>]]:I<ID>	-
7	@[sp]K?<SorD><AorK>,<Ofset>		K:<SorD><AorK><No.>,<Dat>	4-3-3
8	@[sp]A?	If CPU is active:	A:<ID>	4-3-4
		If CPU is passive:	(No response)	
9	@[sp]W?<Lvl>,<Dest>		W!<Lvl><Dest>,<ID>,0 to 2	4-3-5
10	K:<S or D><S or L or A><No.>,<Dat>			4-3-6
11	@[sp]F?<Lvl>		F:<Lvl><Dst Size>,<Src Size>/< Dst Size >,<Src Size>	4-3-7
12	**Preset video format, reference and switching point.** @[sp]UF:<YY>/<R#>,<S$>		UF!<YY>/<R#>,<S$>	4-3-8
	Set preset settings. @[sp]UE:A		UR!W UR!<YY>/<R#>,<S$>	
			UR!E(Error response)	
	Cancel preset settings. @[sp]UE:C		UR!C	

* [sp] indicates a space.
* Commands must end with a carriage return (ASCII code 0x0D) only or carriage return and line feed (ASCII code 0x0A). MFR units add a carriage return and line feed in front of and at the end of reply messages.

Command parameters and setting range

<Lvl>	0 - 7	Allows you to specify the level to switch crosspoints. * When in single-level operation.
<Lvls>	0 - 7	Allows you to specify the levels to switch crosspoints. * When in multiple-level operation
<Dest>	000 - 03F	Allows you to specify the crosspoint switchover destination.
<Src>	000 - 07F	Allows you to specify the source of crosspoint switchover.
<ID>	0 - FE	Unit ID. The ID must be different from that of other devices in the same network. Use **1** to **FE** for ID numbers. The host returns **0** when the lock is released.

* All command values are in hexadecimal, starting from 0 (zero).
  (For example, Source "**16**" is represented as <Src>"**F**.")
* If levels are not in use, set <Lvl> or <Lvls> to "0"(zero).

4-3-1. Command Responses

- **Echo and Prompt**
  Responses will be sent as shown below when receiving commands:

A command is received. ↓ Echo ↓ Prompt	 @[sp]X:<Lvls>/<Dest>,<Src>[CR] [CR][LF]>

* MFR units respond with an Echo Reply with the same data that they received. Therefore, echo reply messages end with [CR][LF] or [CR] only. If echo messages with [CR][LF] are received, only [LF] composes the second line.
* MFR units read a command, ended with a newline, and return a prompt to notify that they are ready to receive a new command.
* A carriage return and line feed are not added at the end of "Echo Reply" and "Prompt"

- **“C” responses (Commands 1-6)**
  A “C” response is sent as shown below when a control command is received:

[CR][LF]C:<Lvls>/<Dest>,<Src>[···[S<**Salvo number**>][L<**Link number**>]]:I<ID>[CR][LF]

* C responses are sent to all the terminals in the system.

Parameter	Setting range	Description
<Salvo number>	1−FFF	The number of crosspoints that are to be changed simultaneously by Salvo settings. A response if 3 crosspoints are to be changed simultaneously: **C:0/0,0...S2:IA**
<Link number>	1−FFF	The number of crosspoints that are to be changed simultaneously by Link settings. A response if 2 crosspoints are to be changed simultaneously: **C:0/0,2...L1:IA**

- **“S” responses (Commands 1-6)**
  An “S” response is sent as shown below when crosspoints are switched by a command.

[CR][LF]S:<Lvl><Dest>,<Src>[CR][LF]

* If a crosspoint is switched by an X or B command, its “S” response is sent to all the terminals in the system. However, if any crosspoints are not switched (specifying the same crosspoint as the current one), its “S” response is sent only to the terminal that sent the command.
* C responses are sent before S responses in some cases.
* A command is received from another terminal while a B or X command is processed, MFR units send “S” response messages to the terminals, notifying only the latest crosspoint states.
* A crosspoint switch command is not performed if the relevant crosspoint is locked or inhibited to change.

Ex. 1) When **Source 5** is selected for **Destination 3** in **Level 1:**
(Function 3 in the previous page)

(A)	@ X:0/2,4[CR] [CR][LF]>
(B)	[CR][LF] C:0/2,4:IA[CR][LF]
(C)	[CR][LF] S:02,4[CR][LF]

Terminal display:

```
@ X:0/2,4
>
C:0/2,4:IA

S:02,4
```

Ex. 2) When Source 113 is selected for Destination 49 in Levels 2 to 7:
(Function 3 in the previous page)

(A)	@ X:123456/30,70[CR] [CR][LF]>
(B)	[CR][LF] C:123456/30,70...S5:IA[CR][LF]
(C)	[CR][LF] S:130,70[CR][LF]
(C)	[CR][LF] S:230,70[CR][LF]
(C)	[CR][LF] S:330,70[CR][LF]
(C)	[CR][LF] S:430,70[CR][LF]
(C)	[CR][LF] S:530,70[CR][LF]
(C)	[CR][LF] S:630,70[CR][LF]

Terminal display:

```
@ X:123456/30,70
>
C:123456/30,70…S5:IA

S:130,70

S:230,70

S:330,70

S:430,70

S:530,70

S:630,70
```

* [CR] and [LF] represent Carriage Return (0x0D) and Line Feed (0x0A) respectively.

4-3-2. Receiving Responses (Commands 1-6)

- **Timeout Waiting for Command Response from MFR**

Set the **timeout** period (maximum permitted time until its response returns from the MFR unit) to **1 second** for short message commands and to **5 seconds** for long message commands.

- **If Sending Commands Successively:**
  -For "**X:**", "**B:C**", "**P:**" and "**W:**" commands, send the next command **after** a **prompt** returns.
  -For "**S?**", "**X?**", "**P?**", "V?", "**B:E**" and "**Z:**" commands, send the next command **after** a **prompt and reply messages** return.
  -For "**S?**" and "**Z:**" commands as well as "**V?**" and "**B:E**" commands after executing many preset commands, send the next command **after** having finished receiving **all strings** of reply messages.

Ex. 1)
Allows to send the next command when receiving a prompt.
Resends the previous command when the timeout period (5 seconds) have elapsed without reply after sending a command.

Ex. 2)
Allows to send the next command when receiving a prompt.
Resends the previous command when the timeout period (5 seconds) have elapsed without reply after sending a command.
Recognizes and uses "S" responses as tallies (crosspoint states).

Ex. 3)
Allows to send the next command when receiving a prompt.
Recognizes and uses "S" responses as tallies (crosspoint states).
Resends the previous command when the timeout period (5 seconds) have elapsed without reply after sending a command.
Sets the maximum number of continuous resendings, because crosspoints cannot be changed if they are locked or inhibited to change.

Ex. 4)
Allows to send the next command when receiving a prompt.
Resends the previous command when the timeout period (5 seconds) have elapsed without reply (echo) after sending a command.

Ex. 5)
Allows to send the next command when receiving a prompt.

- **Response Message Evaluation Example:**

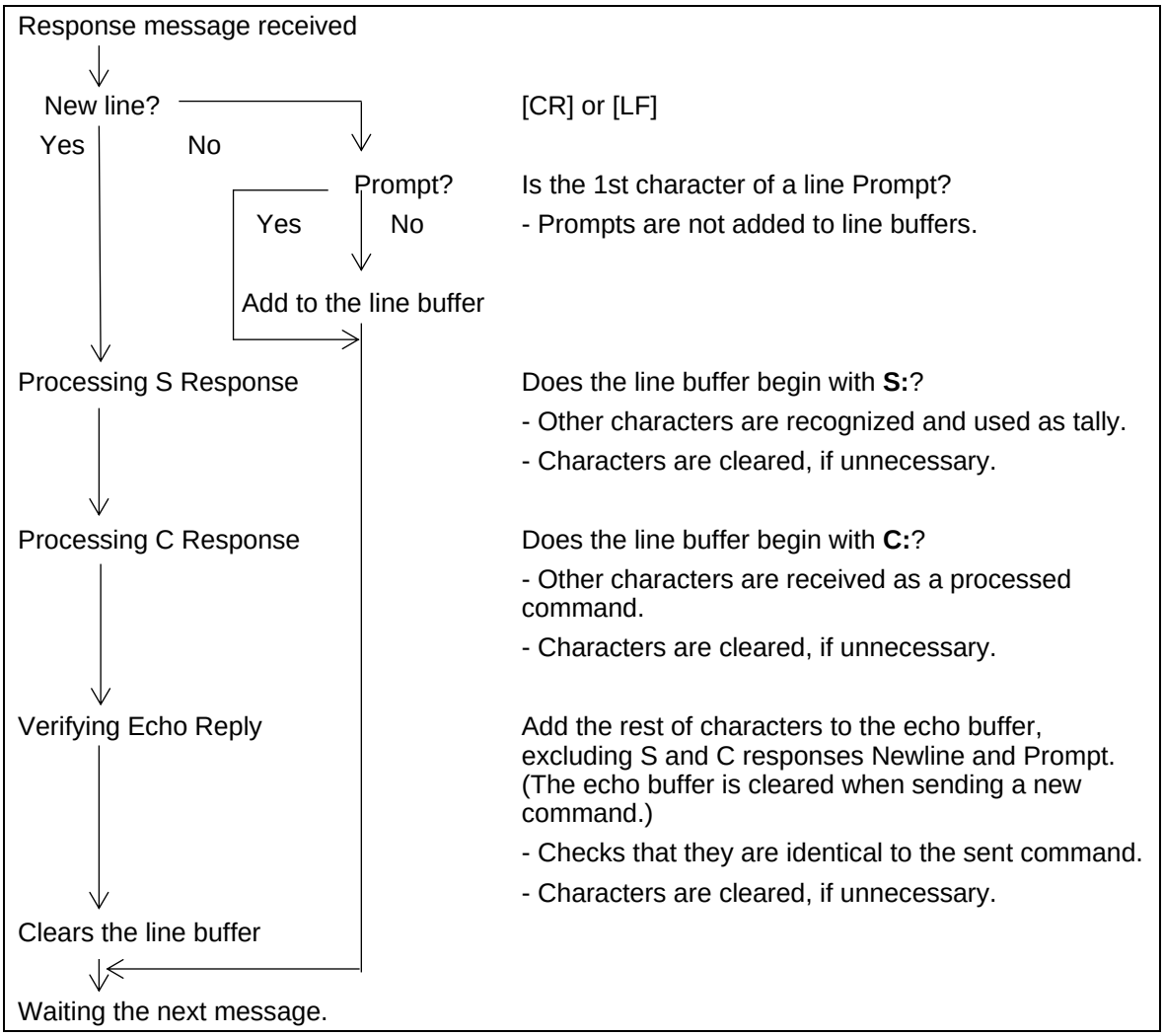

- **If Commands are Overlapped:**

Two or more commands are sent from different terminals (via serial or LAN interface, or Remote Control units), all command results (C and S responses) are sent to all these terminals from the MFR.
The following command examples shows how overlapped commands are processed.

Ex.) Assume that the following commands are overlapped:
Terminal 1 sent "@ X:0/2,4."
Terminal 2 sent "@ X:123456/30,70."

Message examples returned to Terminal 1

1-(A)	@ X:0/2,4[CR] [CR][LF]>
1-(B)	[CR][LF] C:0/2,4:IA[CR][LF]
2-(B)	[CR][LF] C:123456/30,70...S5:IA[CR][LF]
1-(C)	[CR][LF] S:02,4[CR][LF]
2-(C)	[CR][LF] S:130,70[CR][LF]
2-(C)	[CR][LF] S:230,70[CR][LF]
2-(C)	[CR][LF] S:330,70[CR][LF]
2-(C)	[CR][LF] S:430,70[CR][LF]
2-(C)	[CR][LF] S:530,70[CR][LF]
2-(C)	[CR][LF] S:630,70[CR][LF]

Terminal display:

```
@ X:0/2,4
>
C:0/2,4:IA

C:123456/30,70...S5:IA

S:02,4

S:130,70

S:230,70

S:330,70

S:430,70

S:530,70

S:630,70
```

Message examples returned to Terminal 2

2-(A)	@ X:123456/30,70[CR] [CR][LF]>
1-(B)	[CR][LF] C:0/2,4:IA[CR][LF]
2-(B)	[CR][LF] C:123456/30,70...S5:IA[CR][LF]
1-(C)	[CR][LF] S:02,4[CR][LF]
2-(C)	[CR][LF] S:130,70[CR][LF]
2-(C)	[CR][LF] S:230,70[CR][LF]
2-(C)	[CR][LF] S:330,70[CR][LF]
2-(C)	[CR][LF] S:430,70[CR][LF]
2-(C)	[CR][LF] S:530,70[CR][LF]
2-(C)	[CR][LF] S:630,70[CR][LF]

Terminal display:

```
@ X:123456/30,70
>
C:0/2,4:IA
C:123456/30,70...S5:IA

S:02,4

S:130,70

S:230,70

S:330,70

S:430,70

S:530,70

S:630,70
```

* C responses are sent before S responses in some cases.

4-3-3. Channel Name Request Commands (7)

K? Commands allow you to obtain Source and Destination names in ASCII and/or in Kanji set in the MFR Web-based Control menu.

◆ **Command Format**

Command	Command response
@[sp]K?<SorD><AorK>,<Ofset>	K:<SorD><AorK><No.>,<Dat>

BYTE No.	1	2	3	4	5	6	7	8-10	11
Command	@	[sp]	K	?	S	A	,	000-07F	CR
					D	K		000-03F	

BYTE No.	1	2	3	4	5	6	7-9	10	11-		
Response	CR	LF	K	:	S	A	000-07F	,		CR	LF
					D	K	000-03F				

Command Response	BYTE 5	<S or D> Select between S (Source) or D (Destination) S: Source, D: Destination
	BYTE 6	<A or K> Select A (Ascii) or K (Kanji) for names.
Command	BYTE8-10	<Offset> Specify the start number of channels. Source: 000-07F, Destination: 000-03F
Response	BYTE7-9	<No.> Indicates the channel number. Source: 000-07F, Destination: 000-03F
Response	BYTE11-	<Dat> Indicates the channel name in Ascii or Kanji using hex characters (max. 128 bytes). Character code for Ascii names: **Ascii** Character code for Kanji names: **UTF-8**
Command Response	CR	Carriage return
	LF	Line feed

Up to 32 channel names can be obtained per a single request.
Note that the number of request channels exceeds the system maximum size, no data will return for the exceeded channels.
► See the [Web-based Control: **SystemSize/LevelName** page].

◆ **Command Example 1: Requesting the Source Channel 1 Ascii Name**

➢ Web-based Control (Source Name menu)

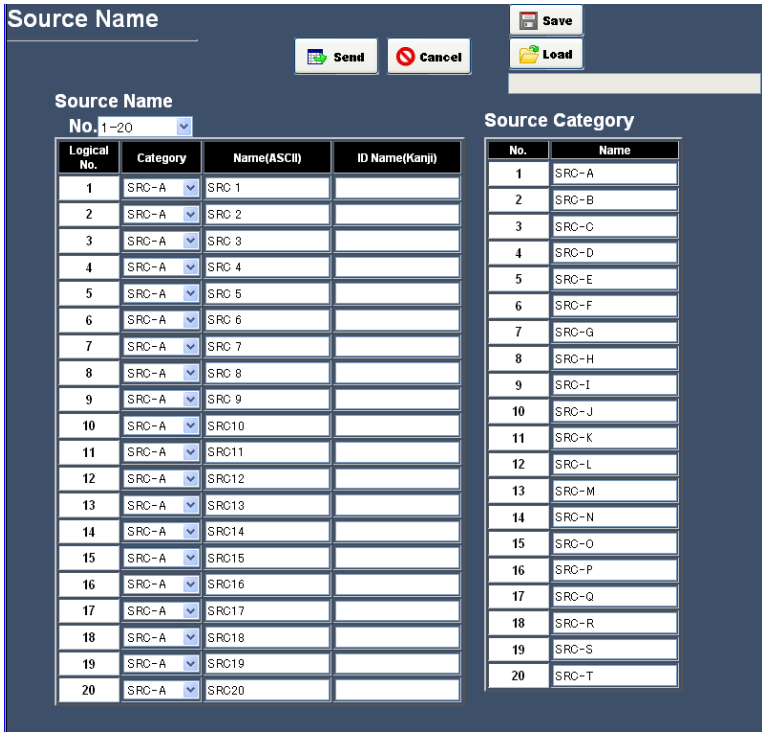

➢ Terminal display

Command	@ K?SA,000

Response	@ K?SA,000	Echo
	K:SA**000**,5352432031	Ascii Name for Source **Channel 1** is SRC 1.
	K:SA**001**,5352432032	Ascii Name for Source **Channel 2** is SRC 2.
	K:SA**002**,5352432033	Ascii Name for Source **Channel 3** is SRC 3.
	I	
	K:SA**01F**,5352433332	Ascii Name for Source **Channel 32** is SRC32.
	>	Prompt

➢ Response details

K:	S	A	000,	53	52	43	20	31
	Source	ASCII	Channel 1	S	R	C	[sp]	1

◆ Command Example 2: Requesting the Destination Channel 101 Kanji Name

➢ Web-based Control (Destination Name menu)

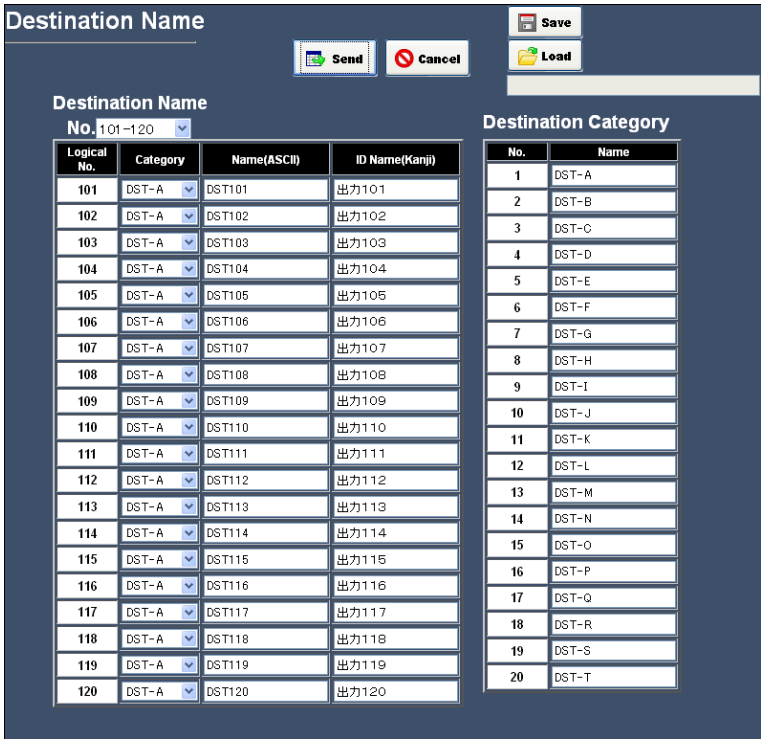

➢ Terminal display

Command	@ K?DK,064

Response	@ K?DK,064	Echo
	K:DK**064**,E587BAE58A9BEFBC91EFBC90 EFBC91	Kanji Name for Destination **Channel 101** is 出力１０１.
	K:DK**065**,E587BAE58A9BEFBC91EFBC90 EFBC92	Kanji Name for Destination **Channel 102** is 出力１０２.
	K:DK**066**,E587BAE58A9BEFBC91EFBC90 EFBC93	Kanji Name for Destination **Channel 103** is 出力１０３.
	I	
	K:DK**083**,E587BAE58A9BEFBC91EFBC93 EFBC92	Kanji Name for Destination **Channel 132** is 出力１３２.
	>	Prompt

➢ Response details

K:	D	K	064,	E587BA	E58A9B	EFBC91	EFBC90	EFBC91
	Destination	Kanji	Channel 101	出	力	1	0	1

K:	D	K	065,	E587BA	E58A9B	EFBC91	EFBC90	EFBC92
	Destination	Kanji	Channel 102	出	力	1	0	2

◆ **Command Example 3: Requesting the Source Channel 65 Kanji Name**

➢ Web-based Control (Source Name menu)

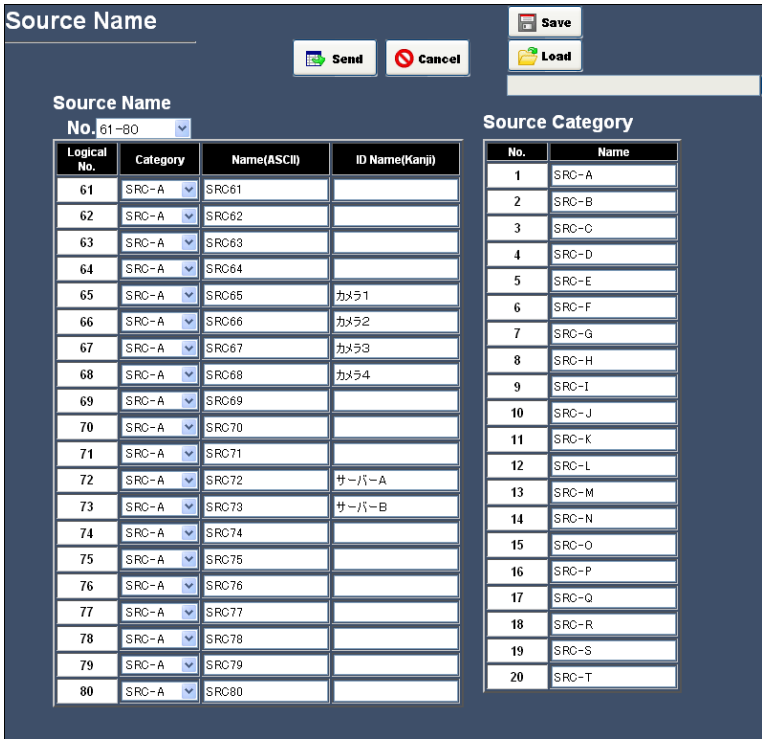

➢ Terminal display

Command	@ K?SK,040

Response	@ K?SK,040	Echo
	K:SK**040**,E382ABE383A1E383A9EFBC91	Kanji Name for Source **Channel 65** is カメラ１.
	K:SK**041**,E382ABE383A1E383A9EFBC92	Kanji Name for Source **Channel 66** is カメラ２.
	K:SK**042**,E382ABE383A1E383A9EFBC93	Kanji Name for Source **Channel 67** is カメラ３.
	K:SK**043**,E382ABE383A1E383A9EFBC94	Kanji Name for Source **Channel 68** is カメラ４.
	K:SK**044**,	Kanji Name for Source **Channel 69** is empty.
	K:SK**045**,	Kanji Name for Source **Channel 70** is empty.
	K:SK**046**,	Kanji Name for Source **Channel 71** is empty.
	K:SK**047**,E382B5E383BCE38390E383BCEFBCA1	Kanji Name for Source **Channel 72** is サーバーＡ.
	I	
	K:SK**05F**,	Kanji Name for Source **Channel 96** is empty.
	>	Prompt

➢ Response details

K:	S	K	040,	E382AB	E383A1	E383A9	EFBC91
	Source	Kanji	Channel 65	カ	メ	ラ	1

K:	S	K	044,	
	Source	Kanji	Channel 69	(Empty)

K:	S	K	047,	E382B5	E383BC	E38390	E383BC	EFBCA1
	Source	Kanji	Channel 72	サ	―	バ	―	A

4-3-4. CPU Status Request Command (8)

This command allows you to indicate which CPU is active in the MFR main unit.

◆ **Command format**

Control command	Command response
@[sp]A?	A:<ID>

BYTE No.	1	2	3	4
Command	@	[sp]	A	?

BYTE No.	1	2	3
Response	A	:	<ID>

<ID>: Unit ID number (01-FE)

◆ **Command Response**

There are two response types whether the CPU is active or passive state.

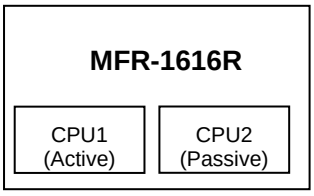

If the CPU is active:

Response	@ A?	Echo
	A:A	Unit ID number is 10 (0x0A)
		New line
	>	Prompt

If the CPU is passive:

Response		No echo, response or prompt

4-3-5. Destination Lock Status Request Command (9)

This command (W?) allows you to indicate the destination lock status in the MFR system.

◆ **Command format**

Control command	Command response
@[sp]W?<Lvl>,<Dest>	W!<Lvl><Dest>,<ID>,0 to 2

BYTE No.	1	2	3	4	5	6	7	8
Command	@	[sp]	W	?	<Lvl>	,	<Dest>	CR

<Dest>: Destination channel number

BYTE No.	1	2	3	4	5	6	7	8	9	10	11	12
Response	CR	LF	W	!	<Lvl>	<Dest>	,	<ID>	,	0	CR	LF
										1		
										2		

0: Nothing locked
1: LOCK ALL
2: LOCK OTHER

◆ **Command Response Examples**

If Destination 1 is locked by ID10 Unit using LOCK, Destination 1 status returns as shown below:

Response	@ W?0,0	Echo
	W!00,A,1	LOCK ALL is applied from the unit ID10 (0x0A) to Dest 1.
		New line
	>	Prompt

If Destination 2 is locked by ID11 Unit using LOCK OTHER, Destination 2 status returns as shown below:

Response	@ W?0,1	Echo
	W!01,B,2	LOCK OTHER is applied from the unit ID11 (0x0B) to Dest 2.
		New line
	>	Prompt

If Destination 3 is not locked, Destination 3 status returns as shown below:

Response	@ W?0,2	Echo
	W!02,0,0	Dest 3 is not locked.
		New line
	>	Prompt

4-3-6. Channel Name Import Command (10)

K: commands allow you to import Source and Destination names from the device that sends K: commands to the MFR system.

◆ **Command Format**

Command	Command response
K:<S or D><S or L or A><No.>,<Dat>	Echo Prompt

BYTE No.	1	2	3	4	5-7	8	9	
Command	K	:	S	S	000-07F	,		CR
			D	L	000-03F			
				A				

BYTE 3	<S or D> Select between S (Source) or D (Destination)
BYTE 4	<S, L or A > Select the destination to which names are imported. S: Source Name or Destination Name, ID Name (Kanji) fields on the Web GUI. L: Source Name or Destination Name, Import Name fields on the Web GUI. A: Source Name or Destination Name, Name (ASCII) fields on the Web GUI.
BYTE5-7	<No.> Indicates the channel number. Source: 000-07F, Destination: 000-03F
BYTE9-	<Dat> Channel names Strings in Hex characters (max. 128 bytes). Character code: UTF-8
CR	Carriage return

4-3-7. System Size Request Command (11)

F? Commands allow you to obtain MFR-1616/ MFR-1616R/ MFR-3216RPS/ MFR-3232RPS system size. (MFR-1616A not supported.)

◆ **Command Format**

Command	Command response
@[sp]F?<Lvl>	F:<Lvl><Dst Size>,<Src Size>/< Dst Size >,<Src Size>

BYTE No.	1	2	3	4	5
Command	@	[sp]	F	?	<Lvl>

BYTE No.	1	2	3	4	5	6	7	8	9	10
Response	F	:	<Lvl>	<Dst Size>	,	<Src Size>	/	<Dst Size>	,	<Src Size>

<Dst Size>: Destination channel number
<Src Size>: Source channel number

◆ **Command / Response Example**

Response	@ F?0	Echo
	F: 03F,07F/03F,07F	64 destination / 128 source channel numbers.
		CR LF
	>	Prompt

4-3-8. Video Format Commands (12)

Video format commands allow you to change router video format settings. (MFR-1616A not supported.) The router restarts automatically when commands are accepted. The commands can also change reference and switching point settings.

◆ **Command Format**

Command description		Commands	Command response
(1)	Preset video format, reference and switching point.	@[sp]UF:<YY>/<R#>,<S$> *1	UF!<YY>/<R#>,<S$>
(2)	Set preset settings.	@[sp]UE:A	UR!W *2 UR!<YY>/<R#>,<S$>
			UR!E (error response)
(3)	Cancel preset settings.	@[sp]UE:C	UR!C

*1 Reference and Switching points are non-compulsory. When they are not input, present settings are output for command response.
MFR-1616/ MFR-1616R/ MFR-3216RPS/ MFR-3232RPS do not support Reference and Switching points settings. When presetting and performing the set changes, Auto("RA") is output for Reference and Field ("SF") is output for Switching points.

*2 "UR!W" is output at 5-seconds intervals after receiving "@[sp]UE:A." When execution environment is ready, "UR!<YY>/<R#>,<S$>" is output.

BYTE	1	2	3	4	5	6	7	8	9	10	11	12	13	14
(1)	@	[sp]	U	F	:	<YY>		/	<R#>		,	<S$>		CR
(2)	@	[sp]	U	E	:	A	CR							
(3)	@	[sp]	U	E	:	C	CR							

<YY>	Video format	**00**: 1080/59.94i **01**: 1080/59.94p **02**: 1080/60i **03**: 1080/60p **04**: 1080/50i **05**: 1080/50p **06**:720/60p	**07**:720/59.94p **08**:720/50p **09**: 1080/30p **0A**: 1080/29.97p **0B**: 1080/25p **0C**: 1080/24p **0D**: 1080/23.98p	**0E**: 1080/30psF **0F**: 1080/29.97psF **10**: 1080/25psF **11**: 1080/24psF **12**: 1080/23.98psF **13**: 525/59.94i **14**: 625/50i
<R#>	Reference	**RA**: Auto	**RB**: B.B	**RT**: Tri-Sync
<S$>	Switching point	**SF**: Field	**SO**: Odd	**SE**: Even

* Commands are not executed if no video format is preset or the current video format is the same as preset setting.

◆ **Command Example 1**

Changes Video Format to **720/59.94p**.

Command	Command response
@[sp]UF:07[CR]	[CR][LF]UF!07/RA,SF[CR]
@[sp]UE:A[CR]	[CR][LF]UR!W [CR][LF]UR!07/RA,SF[CR]

◆ **Command Example 2**

Change Video Format to **1080/59.94p**, Reference to **Tri-level Sync** and Switching Point to Field.

Command	Command response
@[sp]UF:01/RT,SF[CR]	[CR][LF]UF!01/RT,SF[CR]
@[sp]UE:A[CR]	[CR][LF]UR!W [CR][LF]UR!01/RT,SF[CR] (The router automatically restarts)

5. Troubleshooting

If any of the following problems occur during operation of your MFR system, proceed as indicated below to see if the problem can be corrected before assuming a unit malfunction has occurred.

IMPORTANT

If the problem is not corrected by performing the procedures below, turn the unit off and then on again. If this still does not correct the problem, contact your dealer.

Problem	Check	Remedy
No image output.	Are there signal inputs to the video input connectors?	Input video signals to the video input connectors.
	Are cables properly connected for the signal inputs?	Connect cables properly.
	Is the crosspoint set properly?	Set crosspoints properly.
Unable to control using the remote control panel.	Is the LAN cable properly connected?	Properly connect the LAN cable.
	Is the RU Info page in the Web-based Control indicating NG?	Check the item that is indicated as NG. However, if the Voltage is indicated as NG, contact your FOR-A agent. See the Web-based Control User Manual for details.
The secondary CPU is active.	Are both MFR-LAN (CPU1) and MFR-LAN (CPU2) properly connected to the network? (Check the cable and Network switch connections.)	Connect both MFR-LAN (CPU1) and MFR-LAN (CPU2) to the network correctly.
	If network connections are properly made, turn unit power OFF then ON again.	Consult your FOR-A reseller if the secondary CPU is still active after restarting

6. Specifications and Dimensions

6-1. Unit Specifications

6-1-1. MFR-1616/1616R/1616A/3216RPS/3232RPS

Basic specifications

Temperature	0°C to 40°C
Humidity	30**%** to 90% (no condensation)
Power	100VAC to 240VAC ±10%, 50/60Hz
Consumption	100-120V [1616] 36 VA (33 W) [1616R] 37 VA (34 W) [1616A] 16 VA (17W) [3216RPS] 48 VA (45 W) [3232RPS] 60 VA (54 W) 220-240V [1616] 44 VA (34 W) [1616R] 44 VA (34 W) [1616A] 24 VA (17W) [3216RPS] 57 VA (45 W) [3232RPS] 70 VA (52 W)
Dimensions	[1616/1616A] 430(W) x 44(H) x 300(D)mm EIA 1RU 480(W) (including rack mount brackets) [1616R/3216RPS/3232RPS] 430(W) x 88(H) x 300(D)mm EIA 2RU 480(W) (including rack mount brackets)
Weight	[1616/1616R/1616A] 5 kg [3216RPS/3232RPS] 6 kg
Consumables (at 24-hour operation)	Power unit: Replace every 5 years. [1616/1616R/3216RPS/3232RPS] Cooling fan: Replace every 4 years.

MFR-1616/1616R/3216RPS/3232RPS technical specifications

Video Formats	
HD (3G-SDI)	1080/60p, 59.94p, 50p (SMPTE 424M)
HD (HD-SDI)	1080/60i, 59.94i, 50i, 30p, 30PsF, 29.97p, 29.97PsF, 23.98p, 23.98PsF, 25p, 25PsF, 24PsF, 24p, 720/60p, 59.94p, 50p (SMPTE 292M)
SD (SD-SDI)	525/59.94i, 625/50i (SMPTE 259M)
DVB-ASI	Compliant to EN 50083-9
Inputs x Outputs	[1616/1616R] 16 × 16 [3216RPS] 32 × 16 [3232RPS] 32 × 32
Video Inputs	[1616/1616R] 3G/HD/SD-SDI 75Ω BNC x 16 [3216RPS/3232RPS] 3G/HD/SD-SDI 75Ω BNC x 32 Cable equalization -3G-SDI: 70 m (when a 5C-FB equivalent cable is used) -HD-SDI: 100 m (when a 5C-FB equivalent cable is used) -SD-SDI: 200 m (when a 5C-2V equivalent cable is used)

Video Outputs	[1616/1616R] 3G/HD/SD-SDI 75Ω BNC x 16 (with automatic reclocking) [3216RPS] 3G/HD/SD-SDI 75Ω BNC x 16 (with automatic reclocking) [3232RPS] 3G/HD/SD-SDI 75Ω BNC x 32 (with automatic reclocking)
Reference Inputs	BB: NTSC: 0.429 Vp-p/PAL: 0.45 Vp-p or Tri-level sync: ±0.3Vp-p 75Ω BNC x 1, loop-through (Terminate with 75Ω terminator, if unused.)
Interfaces	
MFR-LAN	10/100BASE-TX RJ-45 (for RU/GPI connection, up to 128 units) [1616] x 1 [1616R/3216RPS/3232RPS] x 2 (LAN 2 for MFR-SRCPU)
PC-LAN	10/100BASE-TX RJ-45 x 1 (for computer or other external device connection)
SERIAL	RS-232C/RS-422 (selectable by internal switches) 9-pin D-sub (male) x 1
ALARM	9-pin D-sub (female) x 1

MFR-1616A technical specifications

Inputs x Outputs	16 stereo pairs (32 channels) × 16 stereo pairs (32 channels)
Audio Inputs	AES/EBU: 1.0Vp-p Unbalanced 75Ω BNC x 16
Audio Outputs	AES/EBU：1.0Vp-p±10% Unbalanced 75Ω BNC x 16
Sampling Frequency	32kHz to 96kHz
Reference Input	BB: NTSC: 0.429 Vp-p/PAL: 0.45 Vp-p or Tri-level sync: ±0.3 Vp-p 75Ω BNC x 1, loop-through (Terminate with 75Ω terminator, if unused.)
Interfaces	
MFR-LAN	10/100BASE-TX RJ-45 x 1 (for RU/GPI connection, up to 128 units)
PC-LAN	10/100BASE-TX RJ-45 x 1 (for computer or other external device connection)
RS-232C	RS-232C 9-pin D-sub (male) x 1
ALARM	9-pin D-sub (female) x 1

6-1-2. MFR-GPI

Basic specifications

Temperature	0°C to 40°C
Humidity	30**%** to 85% (no condensation)
Power	+12VDC pin connector x 2 (redundant power supply in standard configuration)
Power Consumption	100 V AC to 120 V AC: 8 VA (4 W) 220 V AC to 240 V AC: 13 VA (6 W)
Dimensions	430 (W) x 44 (H) x 110 (D) mm EIA 1 RU 480 (W) (Including rack mount brackets)
Weight	2 kg

Technical specifications

Number of Connection	Max. 4 (MFR-GPI units only) Max. 128 (including Main, MFR-RU Series, MFR-GPI and MFR-TALM units)
Interface	
MFR-LAN	10/100BASE-TX RJ-45 x 1 (Network switch is needed for Main and multiple unit connections.)
SERVICE	RS-232C: 9-pin D-sub (male) x 1 (for maintenance)
GPI IN/TALLY OUT	37-pin D-sub (female) x 4 128-input/output (user assignable)
SERIAL 1-4	RS-232C/422 (selectable): 9-pin D-sub (male) x 4

6-1-3. MFR-TALM

Basic specifications

Temperature	0°C to 40°C
Humidity	30**%** to 85% (no condensation)
Power	+12 V DC pin connector x 2 (redundant power supplies in standard configuration)
Power Consumption	100 V AC to 120 V AC: 17 VA (9 W) 220 V AC to 240 V AC: 20 VA (9 W)
Dimensions	212 (W) x 44 (H) x 161 (D) mm EIA 1 RU half size 480 (W) (Including single or dual rack mount brackets)
Weight	2 kg

Technical specifications

Number of Connection	Max. 1 (an MFR-TALM unit only) Max. 128 (including Main, MFR-RU Series, MFR-GPI and MFR-TALM units)
Interface	
MFR-LAN	10/100/1000BASE-T RJ-45 x 1 (Network switch is required for Main and multiple unit connections.)
PC-LAN	10/100BASE-TX RJ-45 x 1 (for PC or other external devices)
GPI IN/TALLY OUT	37-pin D-sub (female) x 1 32-input/output (user assignable)
RS-422	9-pin D-sub (male) x 4

6-2. External Dimensions

6-2-1. MFR-1616

(All dimensions in mm.)

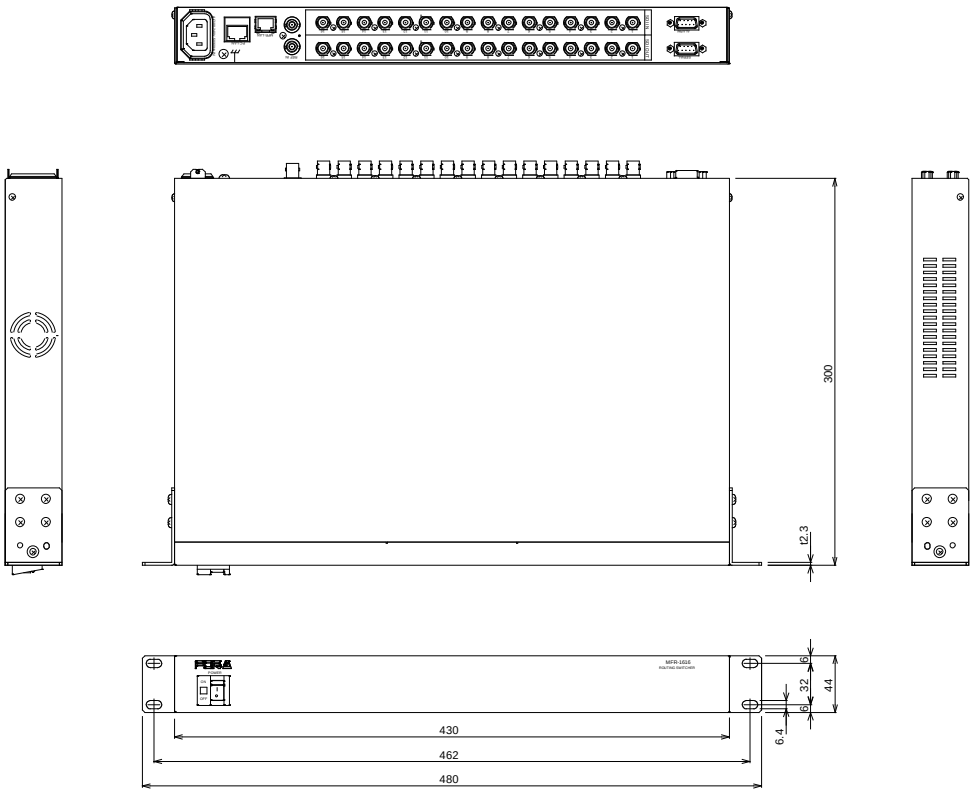

6-2-2. MFR-1616R

(All dimensions in mm.)

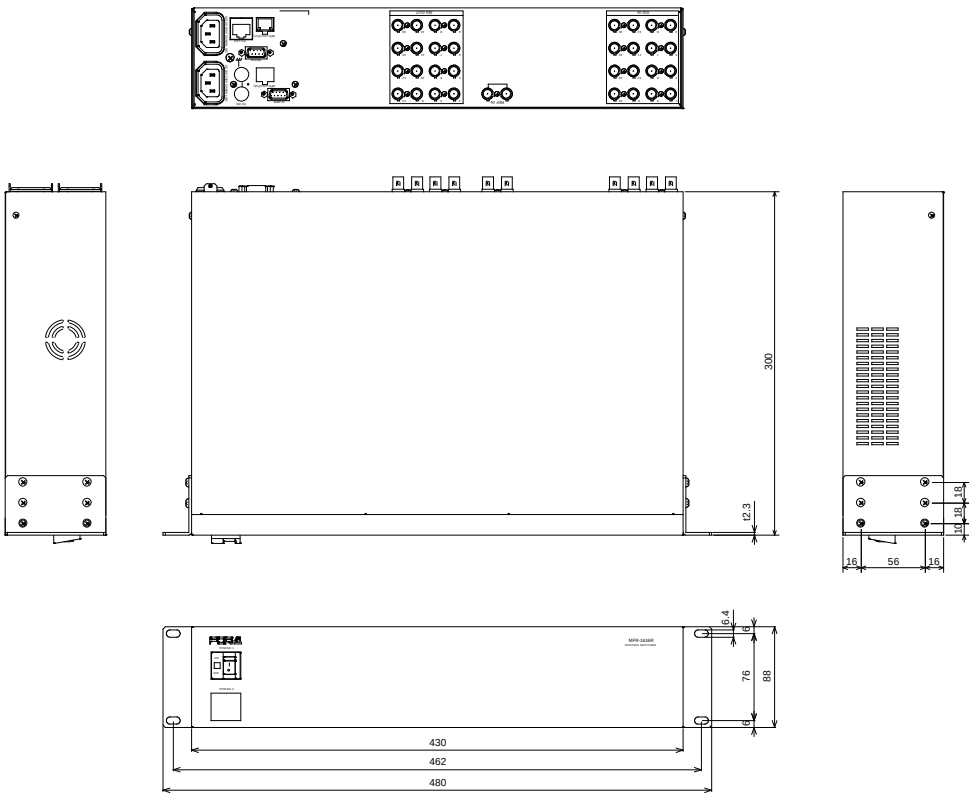

6-2-3. MFR-1616A

(All dimensions in mm.)

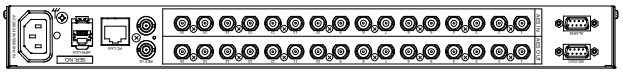

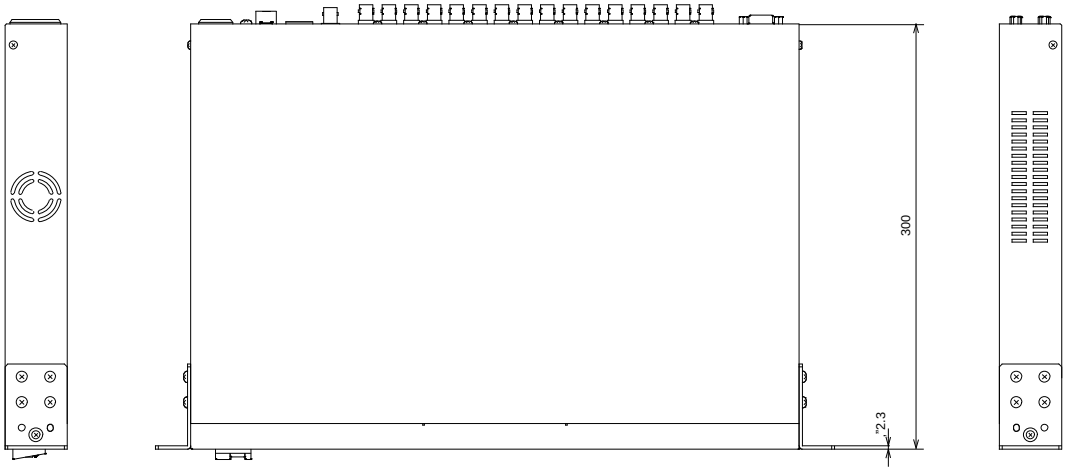

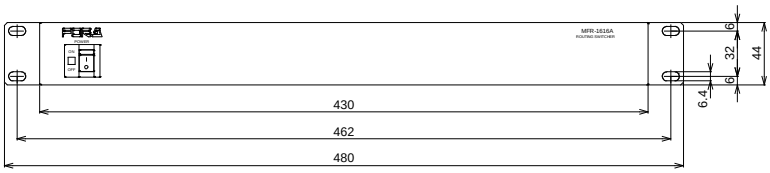

6-2-4. MFR-3216RPS

(All dimensions in mm.)

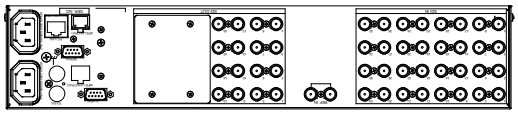

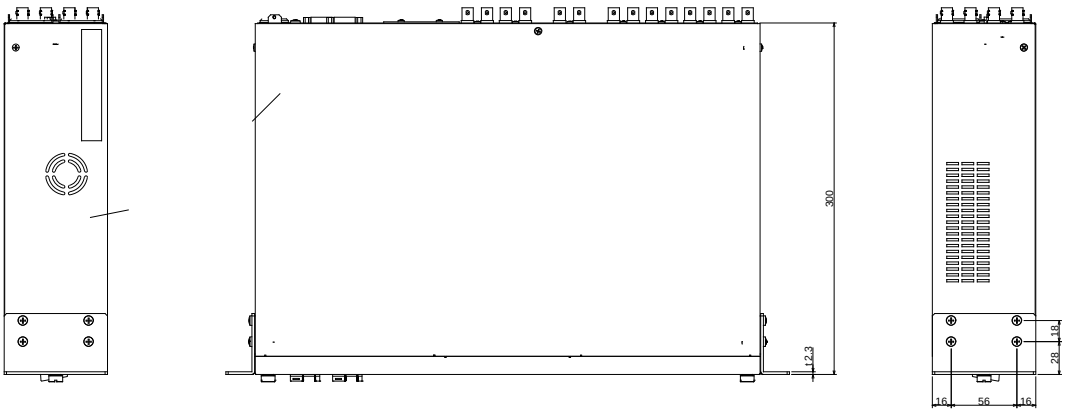

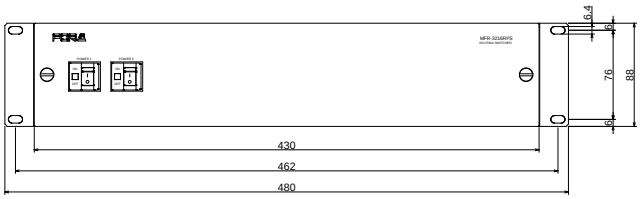

6-2-5. MFR-3232RPS

(All dimensions in mm.)

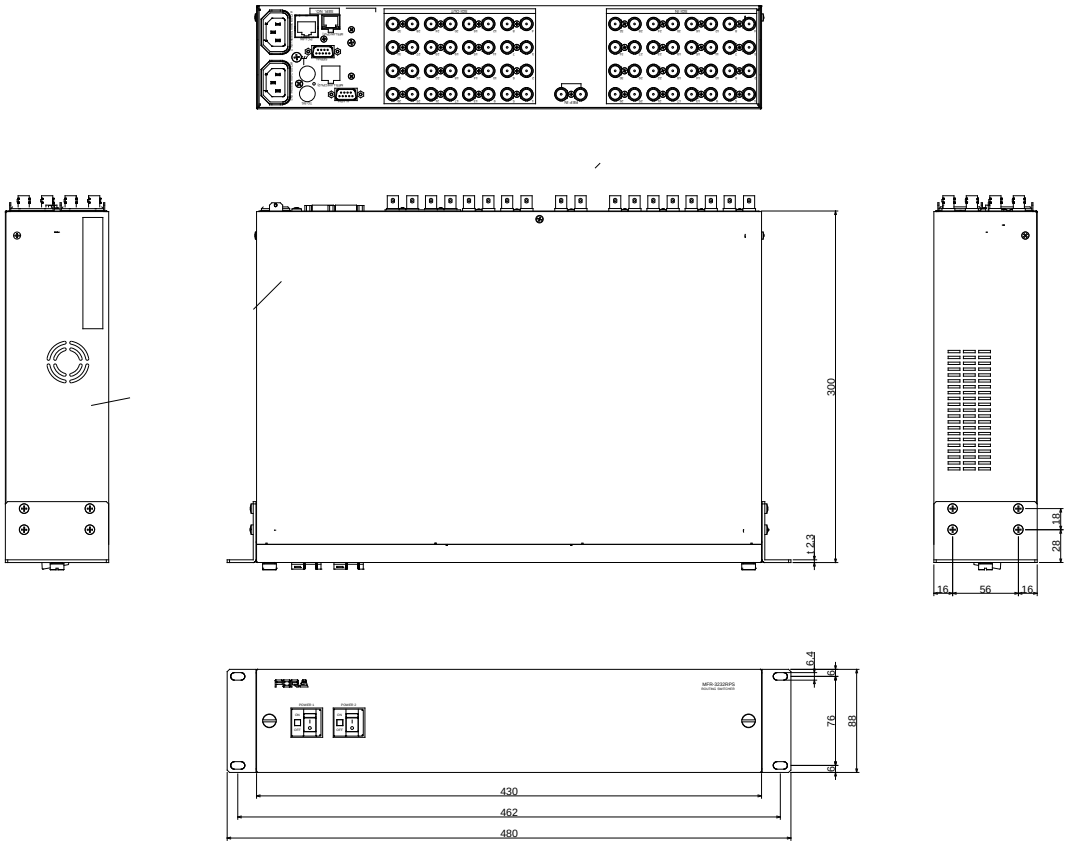

6-2-6. MFR-GPI

(All dimensions in mm.)

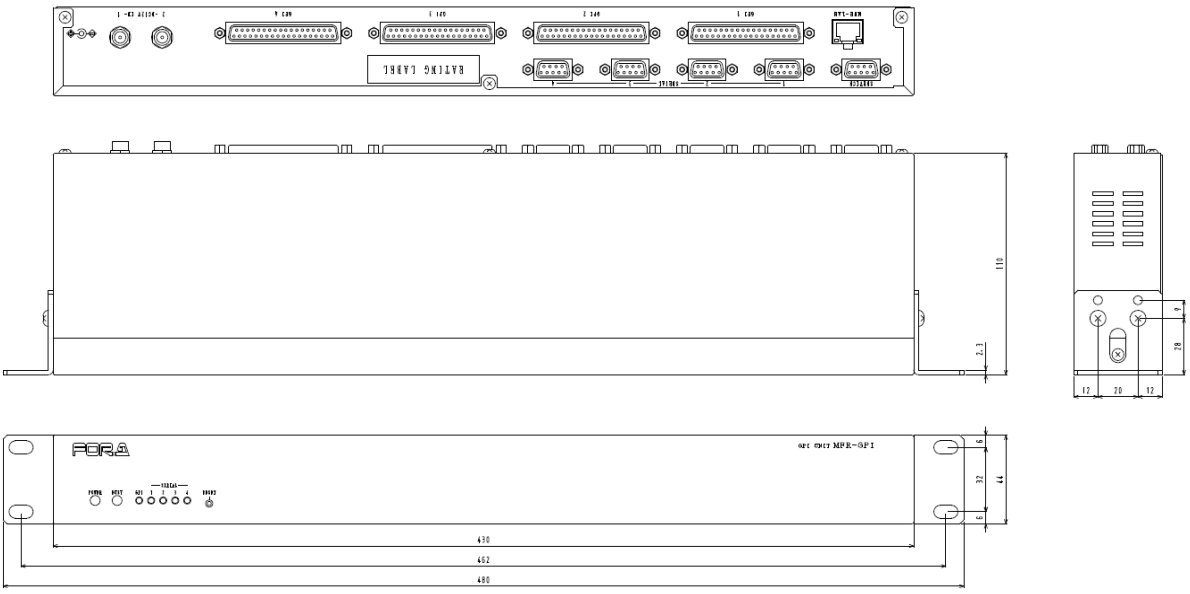

6-2-7. MFR-TALM

(All dimensions in mm.)

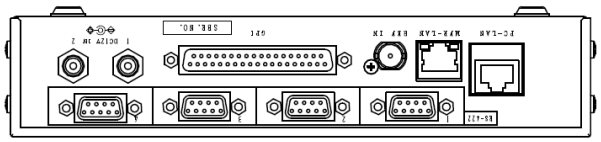

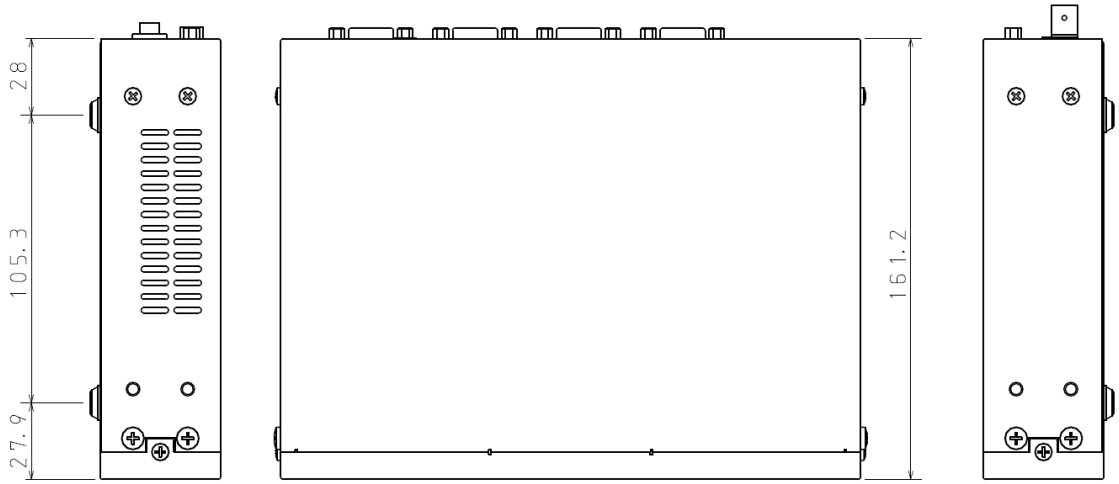

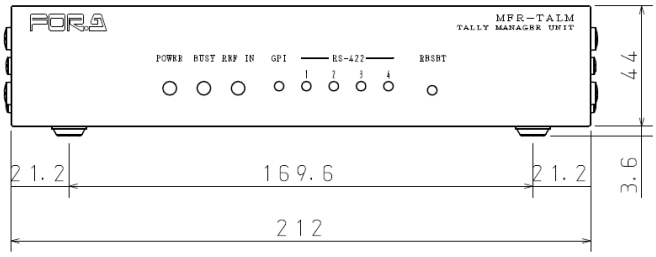

◆ **If attaching the rack mount brackets (Dual / Single)**

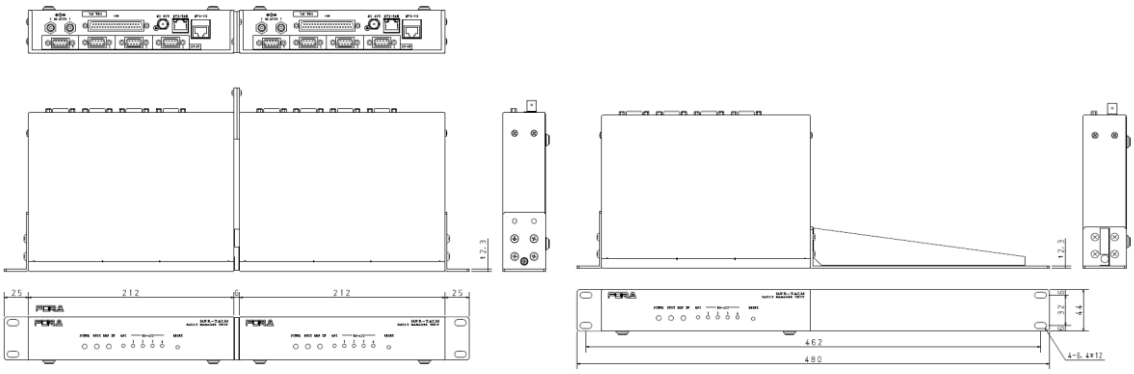

Warning

This equipment has been tested and found to comply with the limits for a Class A digital device, pursuant to Part 15 of FCC Rules. These limits are designed to provide reasonable protection against harmful interference when the equipment is operated in a commercial environment. This equipment generates, uses, and can radiate radio frequency energy and, if not installed and used in accordance with the instruction manual, may cause harmful interference to radio communications. Operation of this equipment in a residential area is likely to cause harmful interference, in which case the user will be required to correct the interference at his own expense.

October 17, 2022 Printed in Japan

FOR-A COMPANY LIMITED

Head Office 3-8-1 Ebisu, Shibuya-ku, Tokyo 150-0013, Japan
Overseas Division Tel: +81(0)3-3446-3936 Fax: +81(0)3-3445-5116

FOR-A Corporation of America Corporate Office/Service Center

11155 Knott Ave., Suite G, H & I, Cypress, CA 90630, U.S.A.
Tel: +1 714-894-3311 Fax: +1 714-894-5399

FOR-A Corporation of America Northeast Office

1360 Clifton Ave., Clifton, NJ 07012, U.S.A.
Tel: +1 973-220-8471 Fax: +1 714-894-5399

FOR-A Corporation of America Southeast Office

Tel: +1-305-773-7608

FOR-A Corporation of America Support Center

2400 N.E. Waldo Road, Gainesville, FL 32609, U.S.A.
Tel: +1 352-371-1505 Fax: +1 714-894-5399

FOR-A Latin America and the Caribbean Miami Office

Tel: +1 657-600-5759

FOR-A Latin America and the Caribbean Sao Paulo Office

Tel: +55 (0)11-99913-3751

FOR-A Europe S.r.l.

Via Volturno, 37, 20861, Brugherio MB, Italy
Tel: +39 (0)39-916-4811

FOR A UK Limited

Trident Court, 1 Oakcroft Road Chessington, KT9 1BD, U.K.
Tel: +44 (0)20-3044-2935 Fax: +44 (0)20-3044-2936

FOR-A Italia S.r.l.

Via Volturno, 37, 20861, Brugherio MB, Italy
Tel: +39 (0)39-881-086

FOR-A Corporation of Korea

1007, 57-5, Yangsan-ro, Yeongdeungpo-gu, Seoul 07271, Korea
Tel: +82 (0)2-2637-0761 Fax: +82 (0)2-2637-0760

FOR-A China Limited

1618 Huateng Building, No. 302, 3 District, Jinsong, Chaoyang, Beijing 100021, China
Tel: +86 (0)10-8721-6023 Fax: +86 (0)10-8721-6033

FOR-A Middle East Africa Office

Aurora Tower, Office 1407, Dubai Media City, P.O. Box 502688, Dubai, UAE
Tel: +971 (0)4 551 5830 Fax: +971 (0)4 551 5832

FOR-A India Private Limited. Mumbai Office

2nd Floor, Valecha Chambers, Link Road, Andheri (W), Mumbai 400053, India
Tel: +91-(0)22-2673-3623 Fax: +91-(0)22-2639-3415

FOR-A India Private Limited. Delhi Office

8th floor, World Trade Tower, Sector-16, Noida, Uttar Pradesh 201301, India
Tel: +91-(0)12-0423-8674

FOR-A South East Asia Office

Studio 09, Rm. A1, 3/F., Phase 1, Hang Fung Ind. Bldg., 2G Hok Yuen St., Hung Hom, Hong Kong
Tel: +852 2110-1352

You can download manuals and other documents by registering your email address.
http://www.for-a.com/