EN

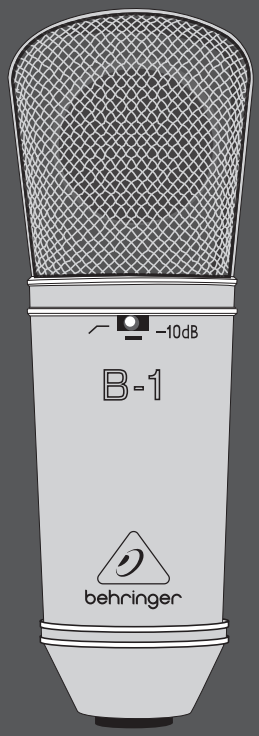

User Manual

SINGLE DIAPHRAGM CONDENSER MICROPHONE B-1

Gold-Sputtered Large-Diaphragm Studio Condenser Microphone

behringer.com

behringer

EN

EN Important Safety Instructions

Terminals marked with this symbol carry electrical current of sufficient magnitude to constitute risk of electric shock. Use only high-quality commercially-available speaker cables with ¼" TS plugs pre-installed. All other installation or modification should be performed only by qualified personnel.

This symbol, wherever it appears, alerts you to the presence of uninsulated dangerous voltage inside the enclosure - voltage that may be sufficient to constitute a risk of shock.

This symbol, wherever it appears, alerts you to important operating and maintenance instructions in the accompanying literature. Please read the manual.

Condenser microphones are extremely moisture-sensitive. Never use your microphone in close proximity to water (e.g. bath-tubs, wash-basins, sinks, washing machines, pools, etc.). When doing voice recordings, always use the enclosed popscreen to safely protect the capsule from moisture.

Always use the power supply specified in the operating instructions.

Take care not to drop your microphone as this can lead to severe damage. BEHRINGER assumes no liability for any damage caused by the user.

When the microphone is not in use, please take it out from its elastic suspension, clean it with a soft cloth, and then place it in its case. Place the bag containing moisture-absorbing crystals close to the microphone head.

Never dismount the screen holding the capsule, as this can damage the microphone! Never try to modify the printed circuit board inside your B-1! This can lead to microphone damage that cannot be repaired. Any such attempt will void the warranty.

Limited Warranty

Please register your new BEHRINGER equipment right after your purchase by visiting behringer.com and read the terms and conditions of our warranty carefully.

EN

1. Power Supply

Your condenser mic B-1 needs a +48-V phantom power supply. Behringer assumes no liability for any damage caused by a defective phantom power supply. Always mute the sound reinforcement system before you switch on the phantom power supply. After power-up, the B-1 needs about 6 seconds to stabilize.

2. Directivity, Low-Cut Filter and Level Attenuation

The capsule used in the B-1 with cardioid characteristics is ideal for the directional recording of instruments or individual vocals. Cardioid characteristics represent the most frequently used polar pattern in recording situations. With this, unwanted sound in reverse phase is not picked up.

The low-cut filter can be activated with the switch on the front (position: left), in order to filter low-frequency interference such as pop sounds, etc. With the low-cut filter on, the B-1 provides an almost linear frequency response with signals picked up at close proximity to the source. The built-in shielding minimizes the microphone's sensitivity to high-frequency interference.

Use the same switch to activate the -10 dB level attenuator (position: right), which should be used with "pulse-type" signal sources producing high sound pressure levels (e.g. kick drum). With the switch set to its center position, both functions are disabled.

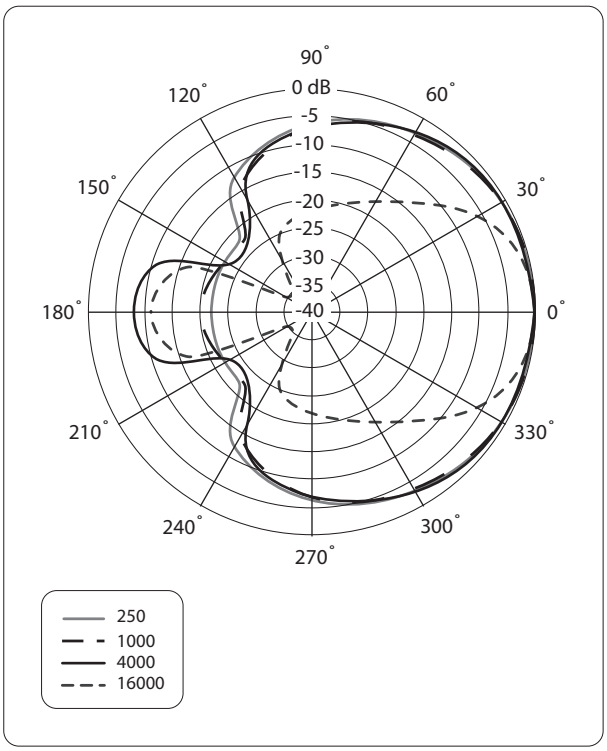

Polar pattern

3. Mounting Microphone and Elastic Suspension

Attach the enclosed elastic suspension to the microphone stand. Fasten the screw, once the suspension has been positioned properly. Open the elastic suspension by pressing the two circular levers, then insert the B-1 from above.

4. Audio Conection/Level Setting

Use a balanced XLR microphone cable with the following pin assignment: pin 1 = shielding; pin 2 = +; pin 3 = -. Since your B-1 features gold-plated contact points throughout, we recommend that you use only microphone cables with gold-plated connectors.

Adjust the gain control in the microphone channel of your mixing console so that the peak LED lights up only occasionally or never at all. The EQ controls in the microphone channel should be set to mid-travel position to start with; low-cut filter and level attenuator should be off. Try to achieve the desired sound by experimenting with the microphone position. Often, it will be useful to set up acoustic barriers ("gobos") at various angles towards the signal source. Only when the desired basic sound has been achieved, should you start to use equalizers and signal processors, if any at all (Remember: less is often more!)

The B-1 provides a level peak around 12 kHz producing some kind of "presence" in this range; so, there is no need for high-frequency EQing which could deteriorate the signal and raise the overall noise floor. On the contrary, the B-1 provides that much-desired transparency which often gets lost during recording and mixing.

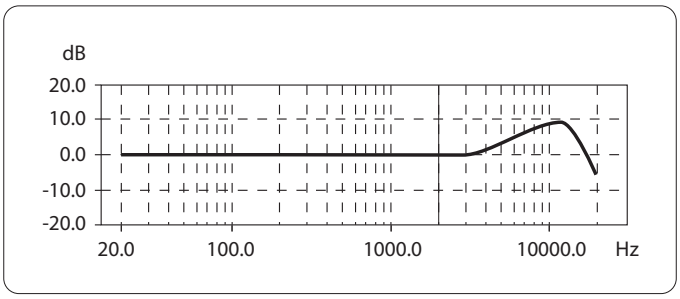

Frequency response

EN

5. Specifications

Transducer type	condenser, 1" single diaphragm
Operating principle	pressure gradient
Polar pattern	cardioid
Connection	gold-plated balanced XLR connector
Open circuit voltage at 1 kHz	-34 +/-2 dBV (0 dBV = 1 V/Pa)
Open circuit sensitivity	20 mV/Pa
Frequency range	20 Hz - 20 kHz
Level attenuation	-10 dB (switchable)
Low-Cut filter	6 dB/Octave at 75 Hz (switchable)
Max. SPL (1% THD @ 1 kHz)	138 dB (0 dB), 148 dB (-10 dB)
Equivalent SPL (IEC 268-4)	13 dB-A
Signal-to-noise ratio re 1 Pa	81 dB A-weighted
Nominal impedance	50 Ω
Load impedance	> 1 kΩ

Mains Voltage/Fuse

Supply voltage	+48 V
Supply current	3 mA

Physical/Weight

Dimensions	Ø: 58 mm, length: 174 mm
Weight	0,461 kg

We Hear You

behringer.com

behringer